*Visit*

**FREETESTPAPER.com**

*for more papers*

Website: freetestpaper.com

Facebook.com/freetestpaper

Twitter.com/freetestpaper

Name: _____ ( ) Class: _____

PRELIMINARY EXAMINATION
GENERAL CERTIFICATE OF EDUCATION ORDINARY LEVEL

---

# PHYSICS 6091/01

Paper 1 Multiple Choice **27 August 2024**

**1 hour**

Additional Materials: Multiple Choice Answer Sheet

---

## READ THESE INSTRUCTIONS FIRST

Write in soft pencil.
Do not use staples, paper clips, highlighters, glue or correction fluid.
Write your name, index number and class on the Answer Sheet in the spaces provided.

There are **forty** questions on this paper. Answer **all** questions. For each question there are four possible answers **A**, **B**, **C** and **D**.
Choose the one you consider correct and record your choice in soft pencil on the separate Answer Sheet.

**Read instructions on the Answer Sheet very carefully.**

Each correct answer will score one mark. A mark will not be deducted for a wrong answer. Any rough working should be done on this booklet.
The use of an approved scientific calculator is expected, where appropriate.

---

This document consists of **18** printed pages.

圣尼各拉女校
CHIJ ST NICHOLAS GIRLS' SCHOOL
Girls of Grace · Women of Strength · Leaders with Heart

[Turn over

FREE TEST PAPERS - FREETESTPAPER.COM

**1** In a test, four students linked the quantities on the left with their units on the right.

Which student matched them all correctly?

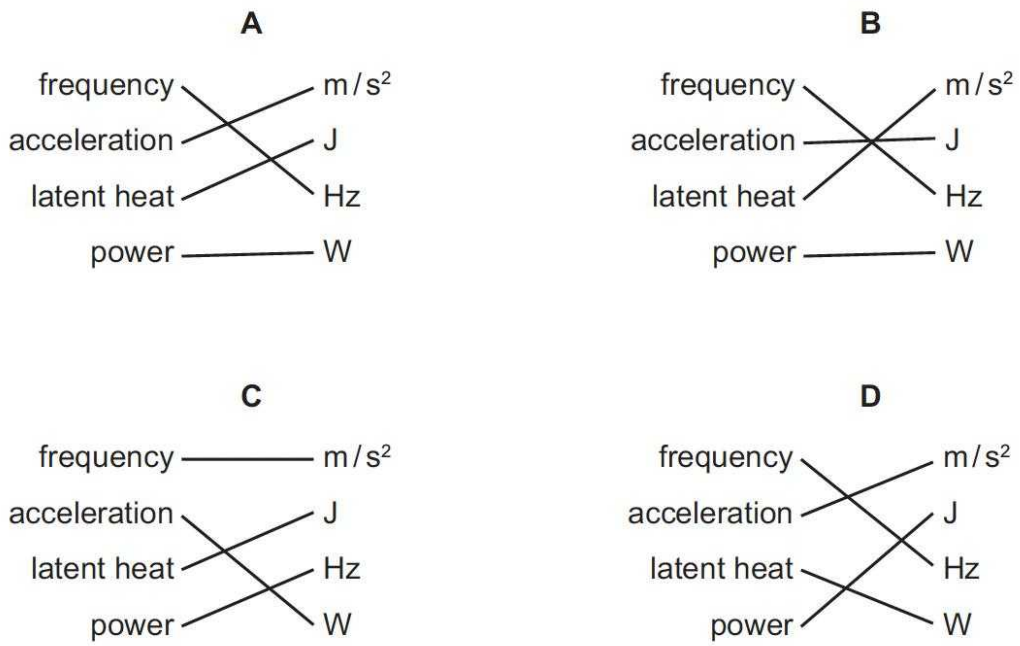


**2** An object travels for 20 s with a constant speed of 10 m/s. For the next 10 s, it accelerates uniformly to 20 m/s.

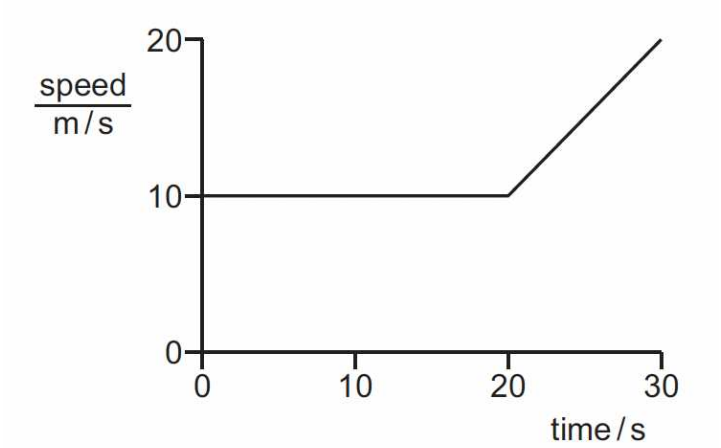


What is the average speed of the object during the last 15 s of its motion?

**A** 11.7 m/s
**B** 12.5 m/s
**C** 13.3 m/s
**D** 15.0 m/s



FREE TEST PAPERS - FREETESTPAPER.COM

**3** What happens to an object if it is moved from a location above sea level to the top of a very tall mountain?

**A** Its density increases.
**B** Its mass increases.
**C** Its weight decreases.
**D** Its volume decreases.

**4** An electric car of mass 1500 kg has a forward acceleration of 4.5 m/s$^2$. A resistive force of 2000 N opposes the motion of the car.

What is the driving force due to the engine of the car?

**A** 1500 N
**B** 2000 N
**C** 6800 N
**D** 8800 N

**5** Four beams of the same length each have three forces acting on them.

Which beam has both zero resultant force and zero resultant moment?

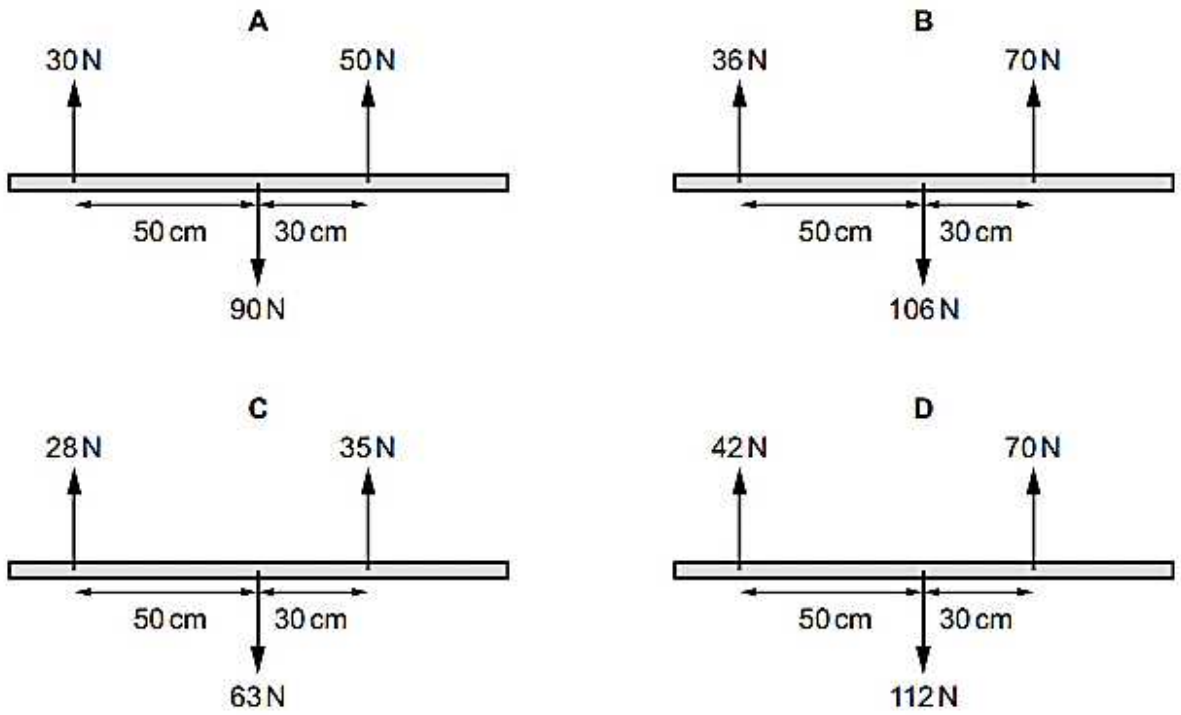




FREE TEST PAPERS - FREETESTPAPER.COM

**6** The diagrams show the cross-sections of different glasses. All the glasses are filled to the top with a liquid of similar density to glass.

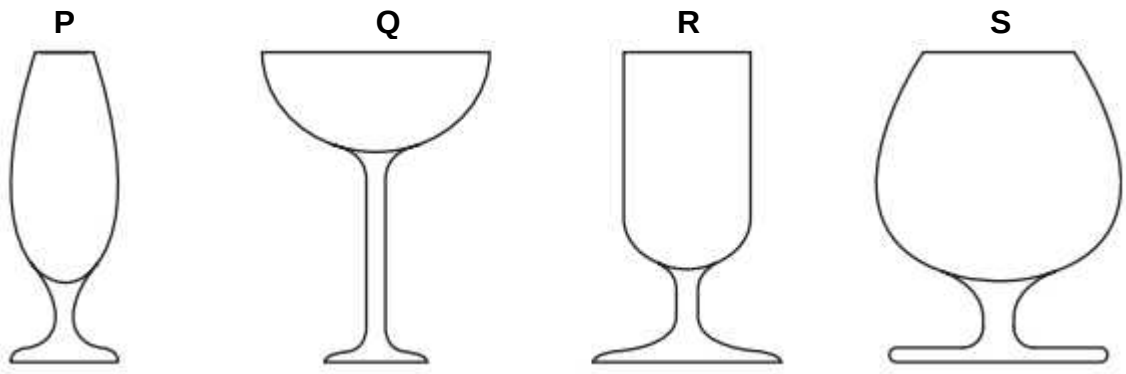


Which row shows the glasses in order of decreasing stability?

**A** **Q → P → R → S**
**B** **Q → R → P → S**
**C** **S → P → R → Q**
**D** **S → R → P → Q**

**7** The tyres of a racing car each have an area of 350 $cm^2$ in contact with the ground.

The car has a mass of 840 kg and its weight is assumed to be equally distributed amongst the four tyres.

The gravitational field strength is 10 N/kg.

What is the pressure exerted on the ground?

**A** 6.0 N / $cm^2$
**B** 24 N / $cm^2$
**C** 60 N / $cm^2$
**D** 240 N / $cm^2$

**8** A metal cube has a mass of 1200 g and sides 4.00 cm each. There is a hole measuring 2.00 cm × 2.00 cm × 1.00 cm at the top.

What is the density of the metal used to make the block?

**A** 17.6 g/$cm^3$
**B** 18.8 g/$cm^3$
**C** 20.0 g/$cm^3$
**D** 21.4 g/$cm^3$



FREE TEST PAPERS - FREETESTPAPER.COM

**9** An underwater diver moves from the ocean to a fresh water lake.

The density of water in the lake is less than in the ocean.

In which position does the diver experience the smallest pressure due to the water?

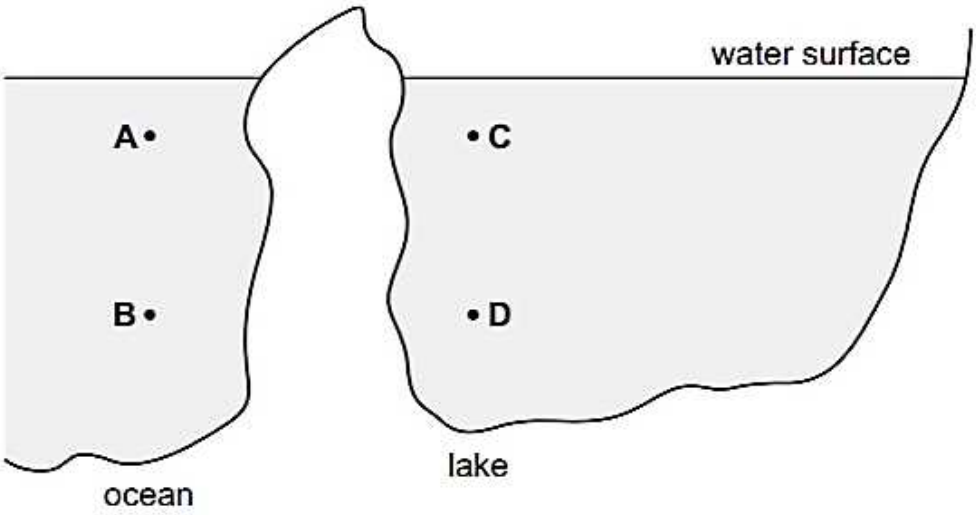


**10** The table shows some data from a high-jump competition.

Which athlete jumps the highest?

| | weight / N | increase in energy of gravitational potential store / J |
|---|---|---|
| **A** | 650 | 1410 |
| **B** | 760 | 1730 |
| **C** | 870 | 1860 |
| **D** | 980 | 1900 |

**11** A small ball bearing is released from the top of a tall cylinder filled with water. After some time, it is observed to fall with constant speed until it reaches the bottom of the cylinder.

What is the main energy transfer taking place as it falls with constant speed?

**A** kinetic store of ball to internal store of water molecules
**B** kinetic store of ball to gravitational potential store of ball
**C** gravitational potential store of ball to kinetic store of ball
**D** gravitational potential store of ball to internal store of water molecules



FREE TEST PAPERS - FREETESTPAPER.COM

**12** Which row best describes the behaviour of molecules in a liquid?

| | distance between the molecules | motion of the molecules | strength of forces between the molecules |
|---|---|---|---|
| **A** | close together | stationary | very strong |
| **B** | close together | random | fairly strong |
| **C** | far apart | stationary | fairly strong |
| **D** | far apart | random | weak |

**13** A gas is in a sealed container of constant volume. The gas is heated and the pressure of the gas on the walls of the container increases.

How do the particles of the gas cause this increase in pressure?

**A** They expand.
**B** They hit each other more frequently.
**C** They hit the container more frequently.
**D** They vibrate faster.

**14** Which statement about the transfer of thermal energy is correct?

**A** Transfer by radiation does not require a medium.
**B** Transfer in solids is by means of density changes in the material.
**C** Transfer is from a region of lower temperature to one of higher temperature.
**D** Transfer upwards in fluids is mainly through the vibrations of neighbouring particles.



FREE TEST PAPERS - FREETESTPAPER.COM

**15** Air in a closed container contains smoke illuminated by bright light. When viewed through a microscope, bright specks of light are seen moving at random.

Which statement is correct?

**A** The random motion of the specks is faster in a vacuum.
**B** The specks move faster when the air is at a higher temperature.
**C** The specks seen are molecules of air in rapid random motion.
**D** When light is turned off, the specks slow down and stop moving.

**16** The diagram shows the changes of state of a substance.

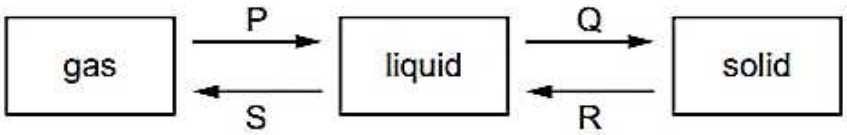


What are the names of the changes of state P, Q, R and S?

| | P | Q | R | S |
|---|---|---|---|---|
| **A** | condensation | melting | solidification | boiling |
| **B** | condensation | solidification | melting | boiling |
| **C** | boiling | melting | solidification | condensation |
| **D** | boiling | solidification | melting | condensation |

**17** When a liquid evaporates, molecules escape from its surface.

Which molecules escape, and what happens to the average kinetic energy of the molecules remaining in the liquid?

| | molecules that escape | average kinetic energy of remaining molecules |
|---|---|---|
| **A** | less energetic | decrease |
| **B** | less energetic | increase |
| **C** | more energetic | decrease |
| **D** | more energetic | increase |



FREE TEST PAPERS - FREETESTPAPER.COM

**18** A 0.30 kW heater is used to heat a well-insulated 3.0 kg mass of copper for 5 minutes. The temperature rises by 75 $^{o}$C.

What is the specific heat capacity of copper?

**A** 0.0067 J/(kg $^{o}$C)
**B** 0.40 J/(kg $^{o}$C)
**C** 6.7 J/(kg $^{o}$C)
**D** 400 J/(kg $^{o}$C)

**19** The diagram shows the change in direction of water waves as they cross a boundary in a ripple tank.

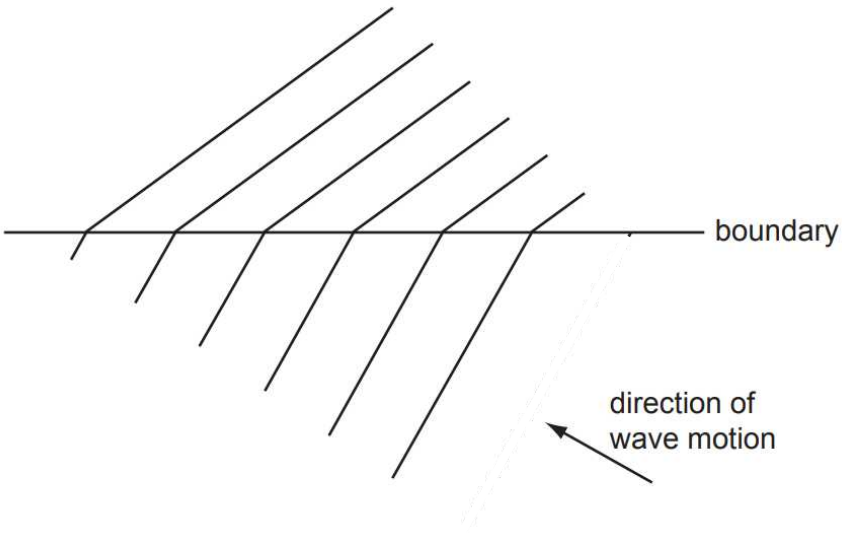


What causes this change in direction?

**A** a change in depth causing a change in frequency
**B** a change in depth causing a change in speed
**C** a change in frequency causing a change in speed
**D** a change in wavelength causing a change in frequency



FREE TEST PAPERS - FREETESTPAPER.COM

**20** The diagram shows a loudspeaker that is producing a continuous sound wave of frequency 200 Hz in air.

Which diagram best shows how the sound wave causes a molecule at P to move in an interval of 5.0 ms?

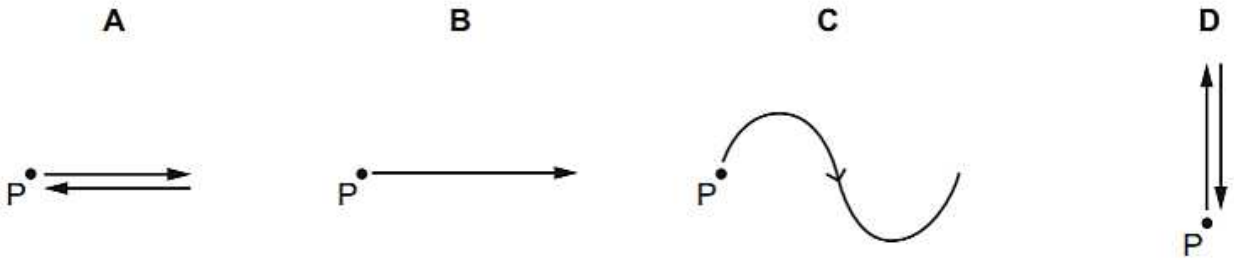


**21** The graph shows, at one instant, the pressure variation along a sound wave.

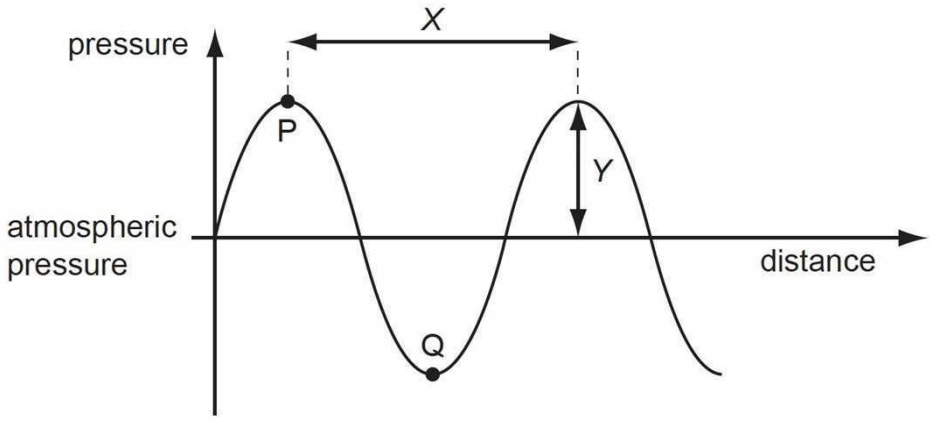


Which point on the diagram represents a rarefaction and what is the wavelength of the sound wave?

| | rarefaction at | wavelength is |
|---|---|---|
| **A** | P | *X* |
| **B** | P | *Y* |
| **C** | Q | *X* |
| **D** | Q | *Y* |



FREE TEST PAPERS - FREETESTPAPER.COM

**22** A loudspeaker and a microphone are placed side by side in front of a wall.

The loudspeaker makes a sound which is detected by the microphone.

The microphone is connected to a device known as an oscilloscope which is set so that each horizontal division on its screen represents a duration of 0.01 s. The microphone detects the original sound and the echo.

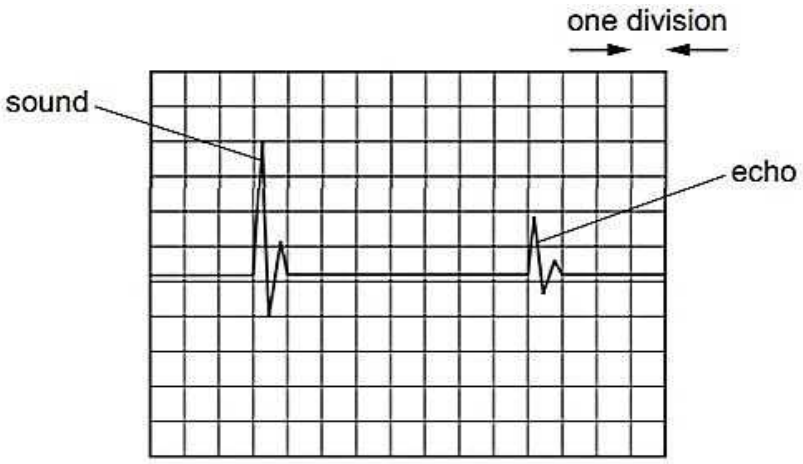


display on oscilloscope

The speed of sound in air is 300 m/s.

What is the distance between the loudspeaker and the wall?

**A** 6.0 m
**B** 12 m
**C** 24 m
**D** 48 m

**23** How do the frequencies and the wavelengths of infrared and ultraviolet radiation compare?

| | higher frequency | longer wavelength |
|---|---|---|
| **A** | infrared | infrared |
| **B** | infrared | ultraviolet |
| **C** | ultraviolet | infrared |
| **D** | ultraviolet | ultraviolet |



FREE TEST PAPERS - FREETESTPAPER.COM

**24** Three objects P, Q and R are placed in front of a plane mirror.

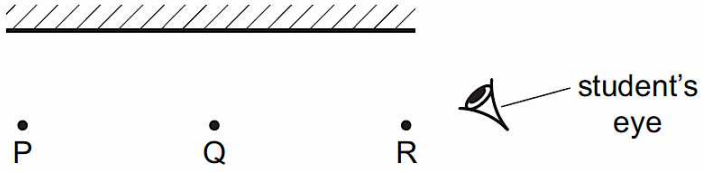


The student's eye is positioned as shown.

Which of the images of P, Q and R can the student see in the mirror?

| | P | Q | R |
|---|---|---|---|
| **A** | ✓ | ✓ | ✓ |
| **B** | ✓ | ✓ | × |
| **C** | × | ✓ | × |
| **D** | × | × | × |

key
✓ = can see
× = cannot see

**25** An object 5.0 cm high is placed 2.0 cm from a converging (convex) lens which is being used as a magnifying glass.

The image produced is 6.0 cm from the lens and is 15 cm high.

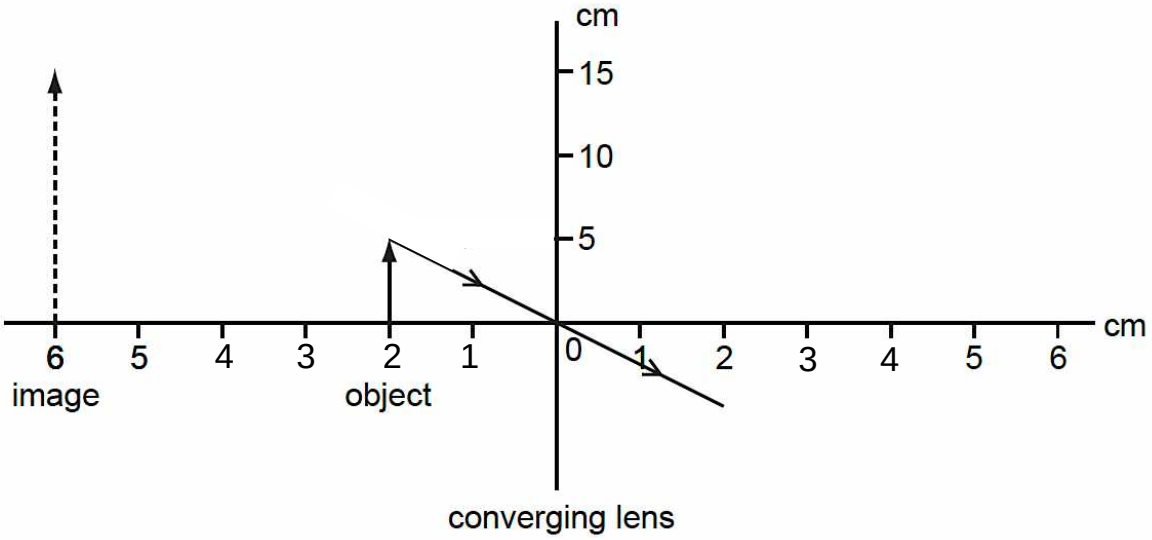


What is the focal length of the lens?

**A** 2.0 cm
**B** 3.0 cm
**C** 4.0 cm
**D** 6.0 cm



FREE TEST PAPERS - FREETESTPAPER.COM

**26** A polythene rod is brought near to a stream of water from a metal tap which is earthed. Tap water is an electrical conductor.

The water moves towards the rod, as shown.

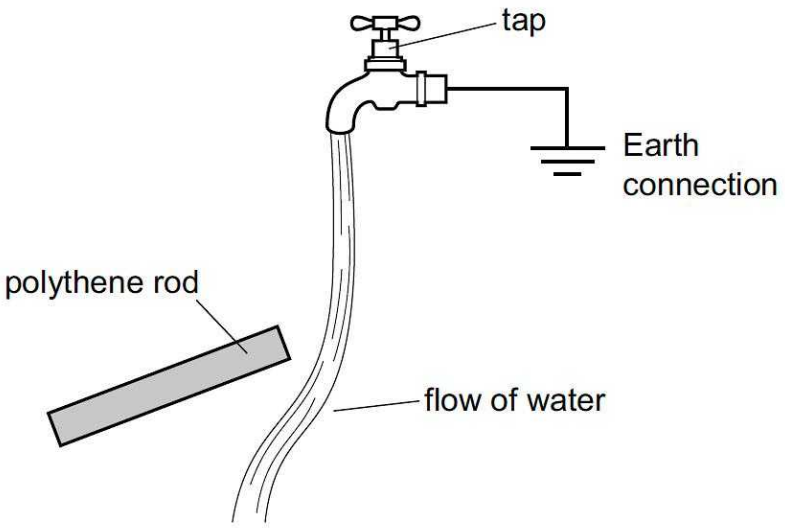


Which description of the rod and water is correct?

| | rod | water |
|---|---|---|
| **A** | charged | charged |
| **B** | charged | uncharged |
| **C** | uncharged | charged |
| **D** | uncharged | uncharged |



FREE TEST PAPERS - FREETESTPAPER.COM

**27** Which diagram correctly shows the electric field between two charged spheres?

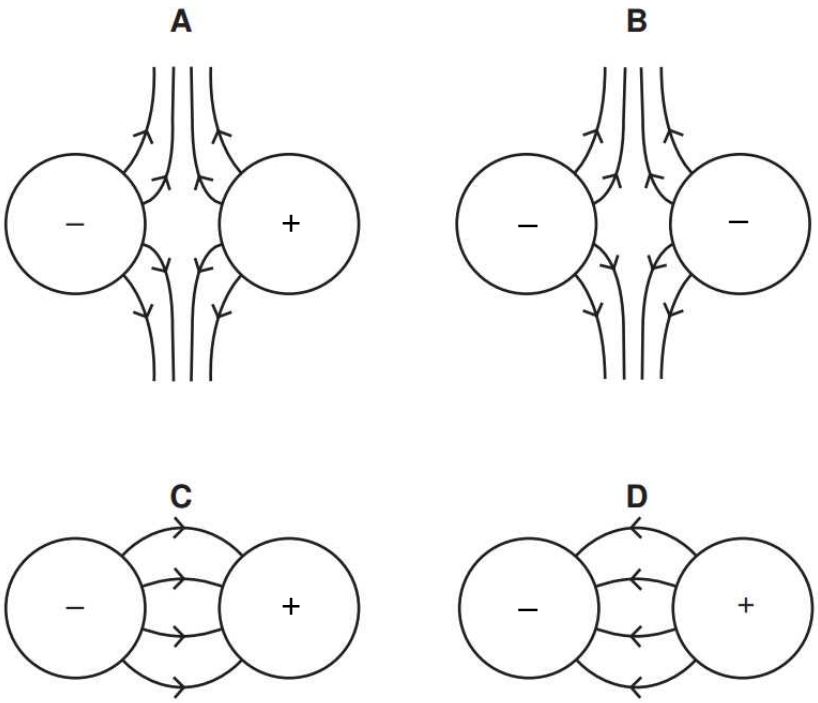


**28** A charge of 9.5 C flows through a resistor in 5.0 s. A student has ammeters with different ranges.

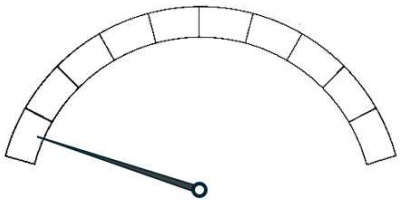

If each ammeter's range is divided into ten intervals as shown above, which ammeter range is the most appropriate to measure the current in the resistor?

**A** 0 – 1 A
**B** 0 – 2 A
**C** 0 – 5 A
**D** 0 – 10 A



FREE TEST PAPERS - FREETESTPAPER.COM

**29** Two resistors of 3 Ω and 6 Ω are arranged in parallel. A p.d. is connected across the terminals X and Y. The current through the 6 Ω resistor is 4 A.

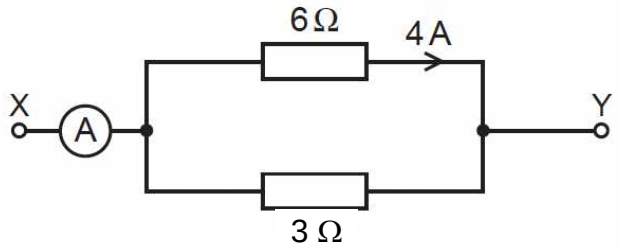


What is the current in the ammeter?

**A** 4 A
**B** 6 A
**C** 8 A
**D** 12 A

**30** Three identical cells are connected in series to a resistor. A student makes the following claims:

(1) Connecting three cells in series allows a voltage higher than what a single cell can provide to the resistor.

(2) Connecting three cells in series enables the circuit to continue providing power to the resistor if any of the cells fail to operate.

Which of the following rows is correct?

| | Statement (1) | Statement (2) |
|---|---|---|
| **A** | True | True |
| **B** | True | False |
| **C** | False | True |
| **D** | False | False |



FREE TEST PAPERS - FREETESTPAPER.COM

**31** Which diagram shows a circuit that can vary the potential difference across the lamp?

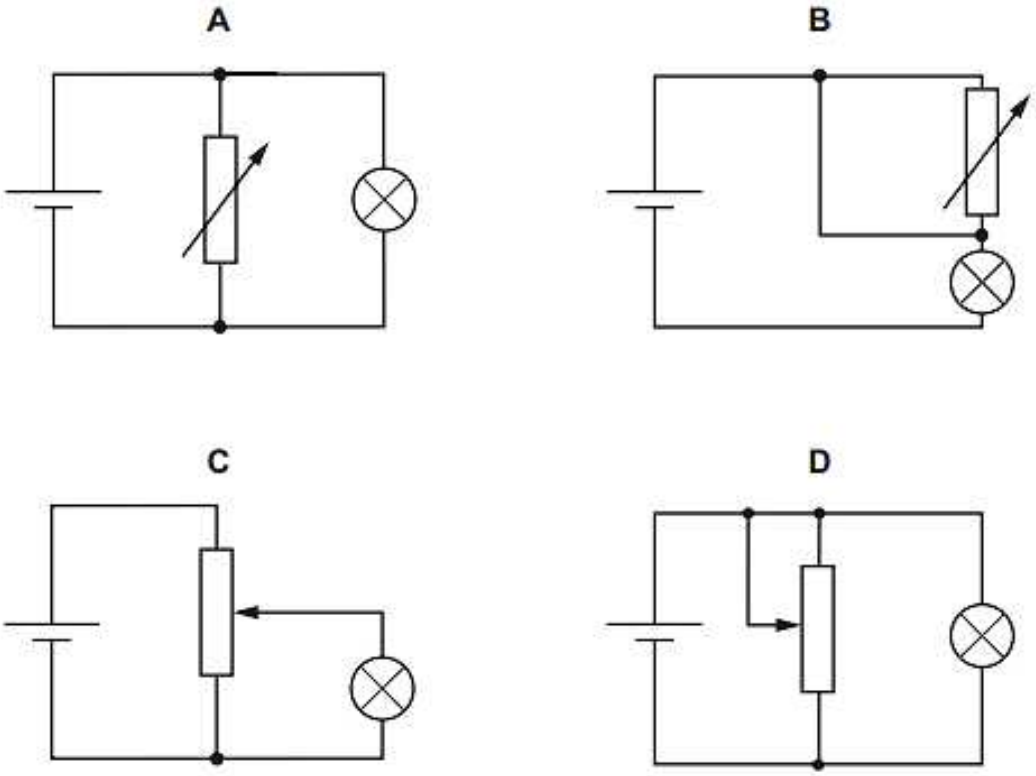


**32** What is the current through the 3.0 Ω resistor in the circuit below?

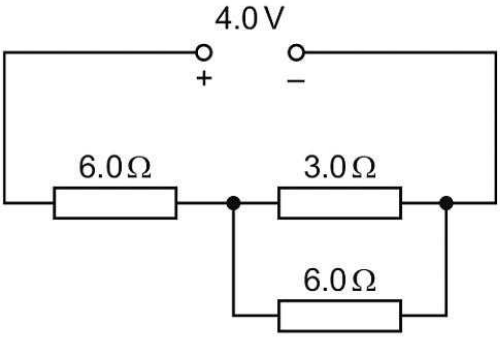


**A** 0.17 A
**B** 0.25 A
**C** 0.33 A
**D** 1.3 A



FREE TEST PAPERS - FREETESTPAPER.COM

**33** A student connected a 12 V, 24 W electric lamp directly to a 6 V power supply.

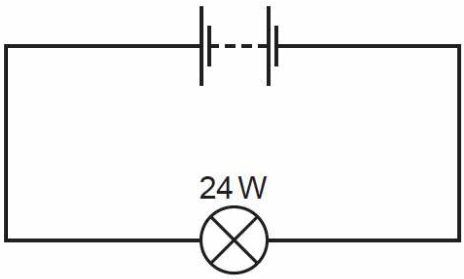


What is the annual cost of using this lamp if the power supply is turned on for 2 hours every day and the cost of electricity is 24 cents per kWh?

**A** 53 cents **B** 105 cents **C** 210 cents **D** 420 cents

**34** A house-owner replaces a blown fuse for the lights of the house. When the lights are switched on, the second fuse also blows. The house-owner then uses a third fuse with a higher rating than the previous two.

Why is this **not** a sensible thing to do?

**A** Fuses only allow the circuit to work if the rating is exactly right.
**B** The circuit may work, but the fault is not corrected.
**C** The third fuse will melt because the rating is too high.
**D** Using a fuse with too high a rating causes electric shocks.

**35** Which properties make materials suitable for use as a core in an electromagnet?

**A** difficult to magnetise and easy to demagnetise
**B** difficult to magnetise and retains magnetic strength
**C** easy to magnetise and easy to demagnetise
**D** easy to magnetise and retains magnetic strength



FREE TEST PAPERS - FREETESTPAPER.COM

**36** A horizontal beam of electrons passes between the two poles of a magnet.

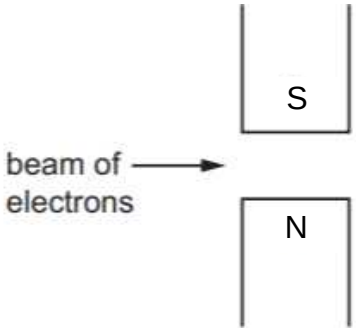


In which direction is the beam deflected?

**A** into the page
**B** out of the page
**C** towards the north pole
**D** towards the south pole

**37** A magnet is pushed slowly into a coil and there is a current in the coil in the direction shown.

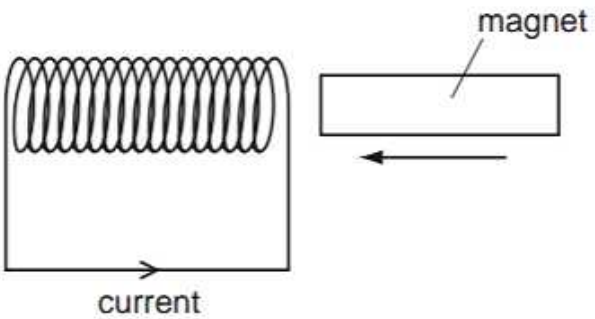


The magnet is then pulled out quickly from the same end of the coil.

What happens to the direction and the size of the current?

| | direction | size |
|---|---|---|
| **A** | reversed | decreased |
| **B** | reversed | increased |
| **C** | unchanged | decreased |
| **D** | unchanged | increased |



FREE TEST PAPERS - FREETESTPAPER.COM

**38** A transformer has 240 turns on its secondary coil and 2400 turns on its primary coil. The primary coil is connected to a 230 V, 50 Hz a.c. supply. The secondary coil is connected to an electric heater.

How does the current in the heater compare with the current in the supply?

**A** higher frequency a.c., larger current
**B** lower frequency a.c., smaller current
**C** same frequency a.c., larger current
**D** same frequency a.c., smaller current

**39** Which row shows the atomic structure of a neutral atom with a nucleon number of 18?

| | number of protons | number of neutrons | number of electrons |
|---|---|---|---|
| **A** | 8 | 8 | 10 |
| **B** | 8 | 10 | 8 |
| **C** | 10 | 8 | 8 |
| **D** | 10 | 10 | 8 |

**40** In nuclear ……1……, hydrogen nuclei ……2…… to form helium nuclei, releasing energy.

Which words correctly complete blanks 1 and 2?

| | 1 | 2 |
|---|---|---|
| **A** | fission | join together |
| **B** | fission | split apart |
| **C** | fusion | join together |
| **D** | fusion | split apart |



FREE TEST PAPERS - FREETESTPAPER.COM

Name _____ (  )  Class _____

PRELIMINARY EXAMINATION
GENERAL CERTIFICATE OF EDUCATION ORDINARY LEVEL

**PHYSICS** **6091/02**

Paper 2 Theory **21 August 2024**

**1 hour 45 minutes**

**READ THESE INSTRUCTIONS FIRST**

Write your name and index number on all the work you hand in.
Write in dark blue or black pen.
You may use a soft pencil for any diagrams or graphs.
Do not use highlighters, correction fluid or correction tape.

**Section A**
Answer **all** questions.

**Section B**
Section B consist of two questions. Answer **only one** out of these two questions.

Students are reminded that **all** quantitative answers should include appropriate units.
The use of approved scientific calculator is expected, where appropriate.
Candidates are advised to show all their working in a clear and orderly manner, as more marks are awarded for sound use of Physics than for correct answers.

The number of marks is given in brackets [ ] at the end of each question or part question.

| For Examiner's Use | |
|---|---|
| **Section A (70 Marks)** | |
| **Section B (10 Marks)** | |
| **Total (80 Marks)** | |

This document consists of **24** printed pages.

圣尼各拉女校
CHIJ ST NICHOLAS GIRLS' SCHOOL
Girls of Grace · Women of Strength · Leaders with Heart

**[Turn over]**



FREE TEST PAPERS - FREETESTPAPER.COM

**Section A (70 marks)**
Answer **all** the questions in this section.

**1** A firework leaves the ground with an intial velocity of 45 m/s, travelling vertically upwards. When it reaches a height of 100 m, it fails to explode and falls back down the same vertical path to the ground.

At any point on its path, the firework has both a speed and a velocity.

**(a)** Explain the difference between speed and velocity.

……

…… [1]

**(b)** Fig. 1.1 shows the displacement-time graph for the first 5.0 s of the motion.

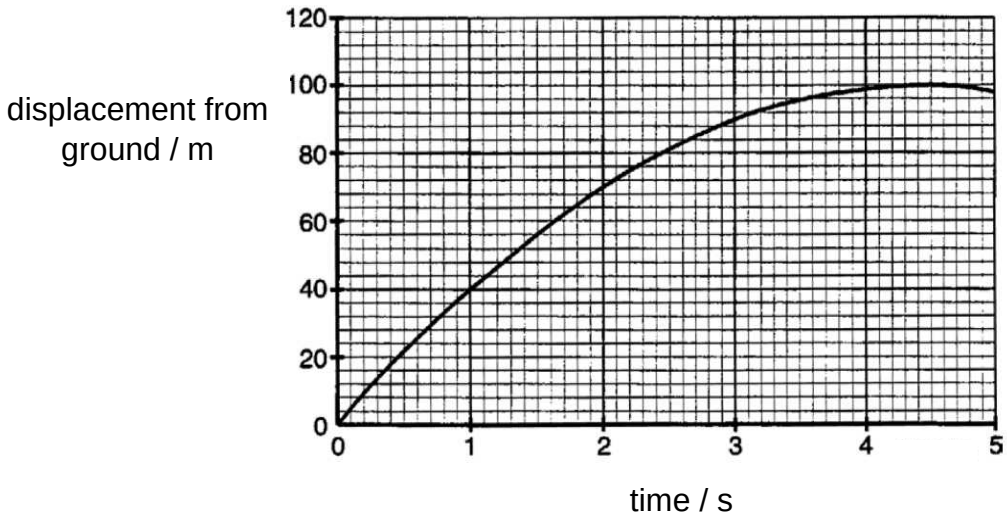


**Fig. 1.1**

**(i)** Determine the time taken for the firework to reach the maximum height.

time taken = …… [1]



FREE TEST PAPERS - FREETESTPAPER.COM

**(ii)** Describe the motion of the firework for the first 5.0 s of its journey.

……....

……....

……....

..... [2]

**(c)** The air resistance acting on the firework is negligble.

The table below is for the magnitude and direction of the acceleration of the firework. Complete the table. Give the unit for the magnitude of any acceleration that you write down.

| | magnitude | direction |
|---|---|---|
| as the firework moves upwards | | |
| at maximum height | | |

[2]

**(d)** In another situation, the firework falls vertically in a horizontal wind. Fig. 1.2 shows the horizontal and vertical velocity of the firework, drawn to a scale where a length of 1.0 cm represents a speed of 10 m/s.

On Fig 1.2, draw the resultant velocity of the firework. Label it with the letter R and its magnitude. Give your answer to a suitable number of significant figures.

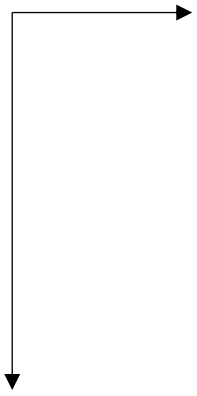

[2]

**Fig. 1.2 (to scale)**

[total: 8]



FREE TEST PAPERS - FREETESTPAPER.COM

**2** Fig. 2.1 shows a farmer lifting a barrel of fruit from the ground to a platform.

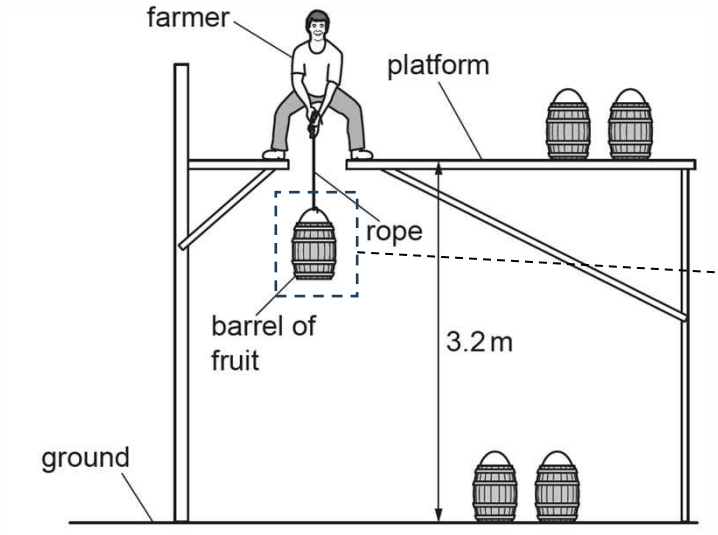


**Fig. 2.1**

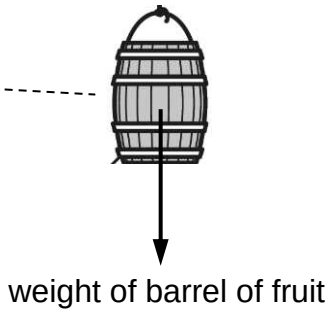


**Fig. 2.2**

**(a)** Fig. 2.2 shows an enlarged diagram of the barrel of fruit lifted by the farmer and one of the two forces acting on the barrel.

Describe the force that forms an action-reaction pair with the force drawn in Fig. 2.2.

…… [1]

**(b)** The farmer lifts the barrel of fruit at a constant speed. The mass of the barrel of fruit is 14 kg.

**(i)** Calculate the work done on the barrel of fruit in lifting it from the ground to the platform. The gravitational field strength is 10 N/kg.

work done = …… [1]



FREE TEST PAPERS - FREETESTPAPER.COM

**(ii)** Describe the energy transfer as the farmer lifts the barrel of fruit.

……

…… [1]

**(c)** The farmer wants to make the process faster. He buys a machine to lift the barrels of fruit.

**(i)** The output power of the machine is 75 W.

Calculate the time taken for the machine to lift a barrel of fruit onto the platform.

time taken = ……. [2]

**(ii)** When the barrel of fruit is near to the platform, the farmer adjusts the output power and decreases the upward force produced. The barrel decelerates with a value of 0.50 $m/s^2$.

Calculate the upward force produced by the machine.

upward force = ……. [2]

[total: 7]



FREE TEST PAPERS - FREETESTPAPER.COM

**3** Fig. 3.1 shows a pot on a hotplate. The hotplate heats up the pot and water.

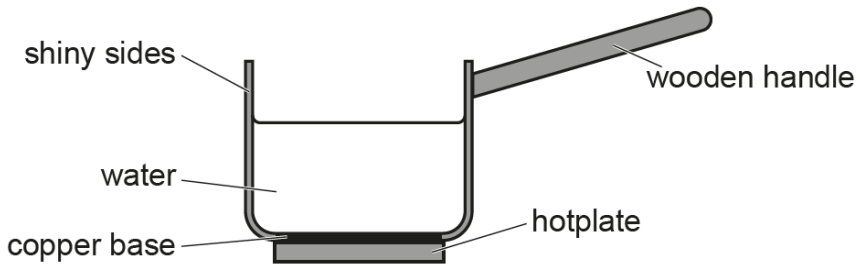


**Fig. 3.1**

**(a)** Describe how water is heated by convection.

…….....

……..... [2]

**(b)** Suggest why

**(i)** the handle of the pot is made of wood,

……

…… [1]

**(ii)** the side of the pot is made of a shiny material,

……

…… [1]

**(iii)** the base of the pot is made of copper.

……

…… [1]

[total: 5]



FREE TEST PAPERS - FREETESTPAPER.COM

**4** Fig. 4.1 shows a ray of light passing into a right-angled prism at D.
After reaching E, the light travels along two paths, with one ray travelling along the surface of the prism and one ray along EF.

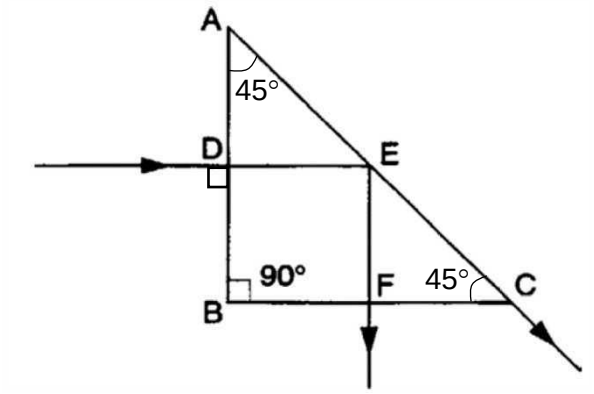


**Fig. 4.1**

**(a)** State one property of light that changes at D and whether it increases or decreases.

……

…… [2]

**(b)** **(i)** On Fig.4.1, identify the critical angle and label with letter X. [1]

**(ii)** Hence, determine the refractive index of this glass.

refractive index = …… [2]

**(iii)** The prism is replaced with another one with a greater refractive index. Describe what happens to the path of light.

……

…… [1]



FREE TEST PAPERS - FREETESTPAPER.COM

**(c)** Visible light is a type of electromagnetic wave. All electromagnetic waves transfer energy and travel through vacuum at a speed of $3.0 \times 10^8$ m/s.

**(i)** State one other property common to all components of the electromagnetic spectrum.

…… [1]

**(ii)** The wavelength of red light is 690 nm.
Calculate the frequency of this wave in vacuum.

frequency = …….. [2]

[total: 9]



FREE TEST PAPERS - FREETESTPAPER.COM

**5** Fig. 5.1 shows the I/V characteristic graph for a filament lamp and a resistor.

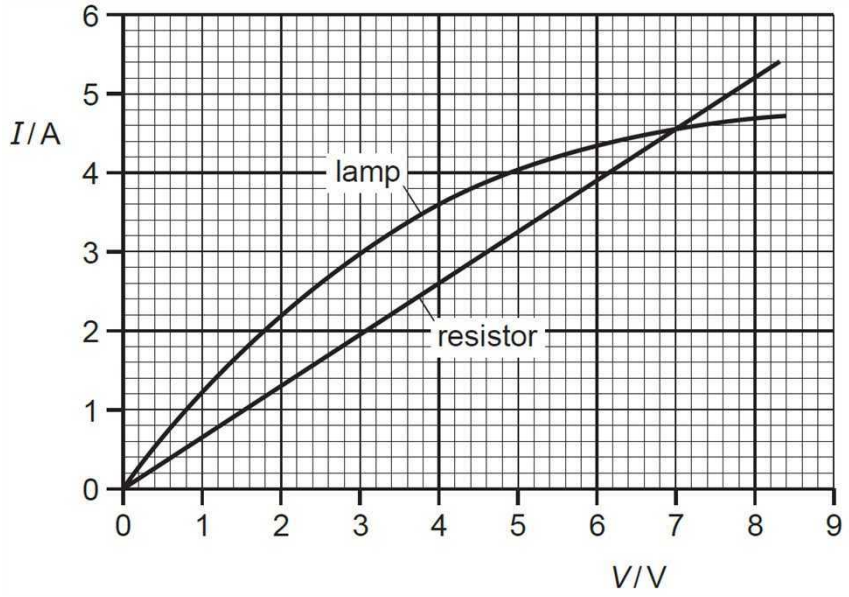


**Fig. 5.1**

**(a)** Describe how Fig. 5.1 shows that the resistor obeys Ohm's Law.

……

……

…… [1]

**(b)** State the value of the potential difference where the lamp and the resistor have the same resistance.

potential difference = …….. [1]

**(c)** Another resistor X is made of the same material as the original resistor but is twice as long and has a diameter three times larger.

Calculate the resistance of resistor X.

resistance = …… [2]



FREE TEST PAPERS - FREETESTPAPER.COM

**(d)** Another lamp labelled 6 V, 12 W is connected to a 6 V fully charged battery and it shines at normal brightness for 12 hours.

Calculate the charge that passes through the lamp during this time.

charge = ……. [2]

[total: 6]



FREE TEST PAPERS - FREETESTPAPER.COM

s

**6** Fig. 6.1 shows a circuit with a light-dependent resistor (LDR) and a resistor with fixed resistance of 8.0 kΩ.

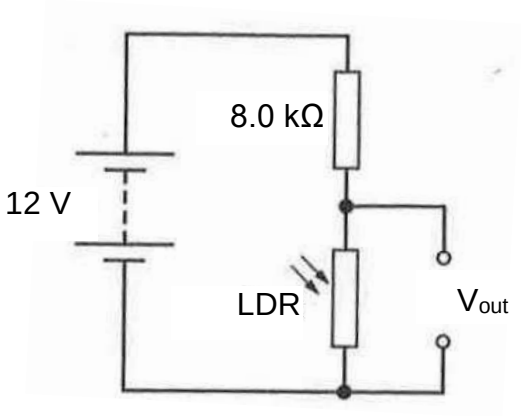


**Fig. 6.1**

The LDR has a resistance of 600 Ω in bright light.

**(a)** Calculate the output voltage $V_{out}$ when the LDR is in bright light.

$V_{out}$= …….. [2]

**(b)** In dim light, $V_{out}$ is 8.0 V. For this level of brightness, determine

**(i)** the voltage across the fixed resistor,

V = ……. [1]

**(ii)** the resistance of the LDR.

resistance = …… [1]



FREE TEST PAPERS - FREETESTPAPER.COM

**(c)** The output is now connected across the resistor. A lamp is connected across the output, and this lamp only switches on when $V_{out}$ is larger than 8.0 V.

Describe and explain the operation of this new device as the level of light changes.

…….....

……

……..

…….. [2]

[total: 6]

**7** **(a)** Fig. 7.1 shows the Fleming's left-hand rule, which helps to deduce the direction of force on a current carrying conductor in a magnetic field.

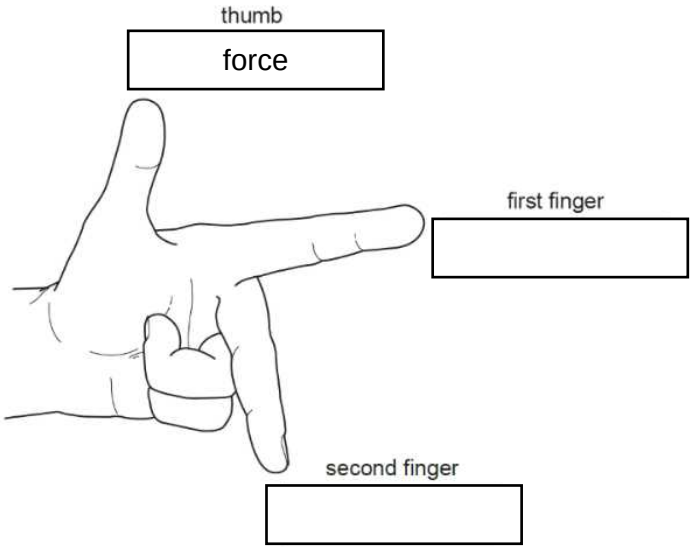


**Fig. 7.1**

One direction has been labelled. In each of the other two boxes, write the name of the quantity that direction represents. [1]



FREE TEST PAPERS - FREETESTPAPER.COM

**(b)** Fig. 7.2 shows a single-coil d.c. motor connected to a battery and a switch. X is the axle of the motor.

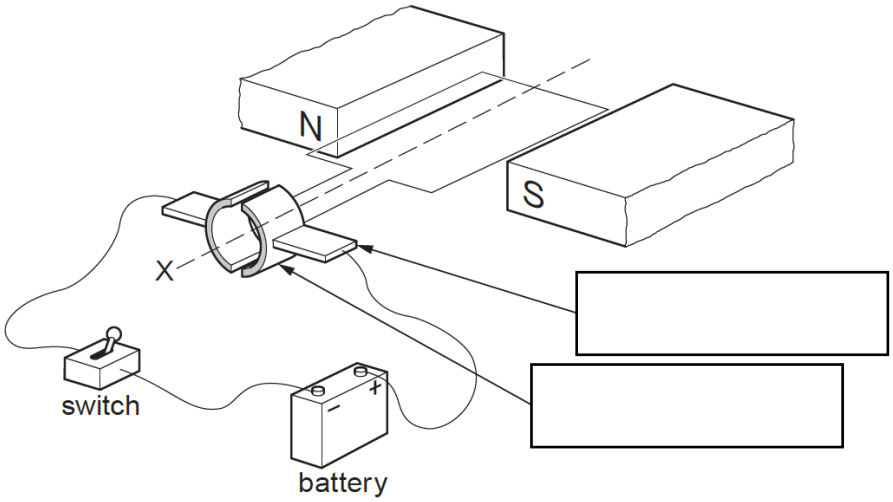


**Fig. 7.2**

**(i)** On Fig. 7.2, write in each of the boxes the name of the part of the motor that the arrow is pointing to. [1]

**(ii)** Explain what happens to the single-coil between the poles of the magnets when the switch is closed.

……

……

……

……

…… [2]

[total: 4]



FREE TEST PAPERS - FREETESTPAPER.COM

**8** Fig. 8.1 shows a copper rod rolling at steady speed down two sloping parallel copper rails. The rails are in the region of a strong magnetic field pointing vertically downwards.

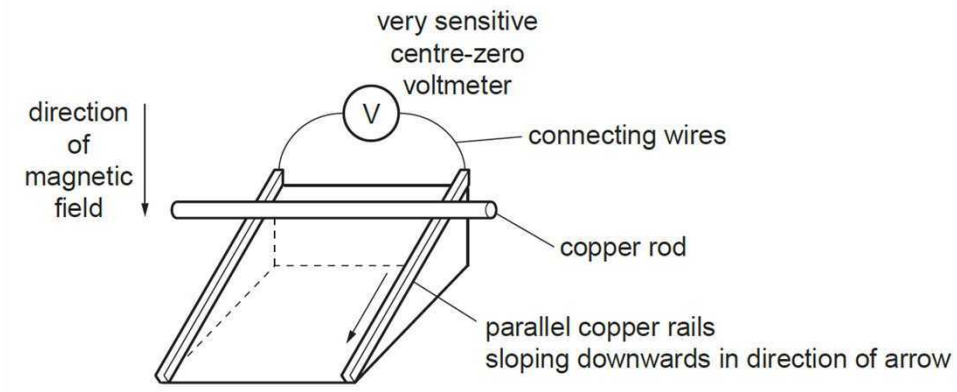


**Fig. 8.1**

**(a)** Explain why the voltmeter shows a deflection.

……

……

…… [2]

**(b)** State, with reasons, the effect of slightly increasing the slope of the copper rails on the voltmeter deflection.

……

…… [1]

**(c)** The voltmeter is removed. The experiment is repeated using a large rectangular copper coil of the same mass as the copper rod.

Explain why the coil initially falls slower down the sloping rails than the copper rod.

……

……

…… [2]

[total: 5]



FREE TEST PAPERS - FREETESTPAPER.COM

**9** Fig. 9.1 shows how the temperature of wax varies with time as it is heated in a container, without a lid.

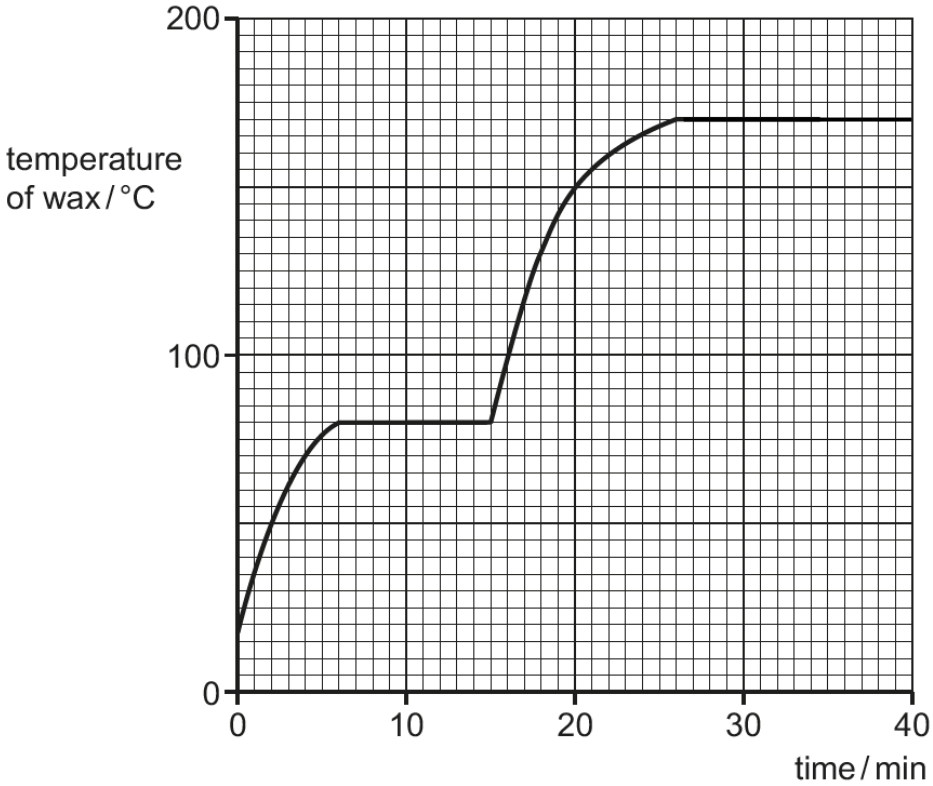


**Fig. 9.1**

**(a)** Using the graph in Fig. 9.1, determine

**(i)** the melting point of wax,

…… [1]

**(ii)** and the time at which the wax starts to boil.

……

…… [1]



FREE TEST PAPERS - FREETESTPAPER.COM

**(b)** Thermal energy is supplied to the wax using an electric heater. The mass of the wax is 200 g.

**(i)** If the ammeter and voltmeter connected to the heater reads 2.5 A and 50.0 V respectively, determine the power supplied by the heater.

power supplied = …… [1]

**(ii)** Assume that the heating process has an efficiency of 80%, determine the specific latent heat of fusion of wax.

specific latent heat of fusion = …… [3]

**(c)** Using Fig. 9.1, state and explain how the specific latent heat of fusion of the substance compares with its specific latent heat of vaporisation.

……

……

…… [2]

**(d)** The experiment is repeated using the same amount of wax in the same container but with a lid.

On Fig. 9.1, sketch a line to show the new variation of temperature with time after the heater is switched on.

[2]



FREE TEST PAPERS - FREETESTPAPER.COM

**(e)** At the end of the process, the *internal energy* (energy in the internal store) of the wax in the container increases.

Define *internal energy*.

……

……

……

…… [1]

[total: 11]



FREE TEST PAPERS - FREETESTPAPER.COM

**10** Fig. 10.1 shows a radioactive source used in a smoke detector.

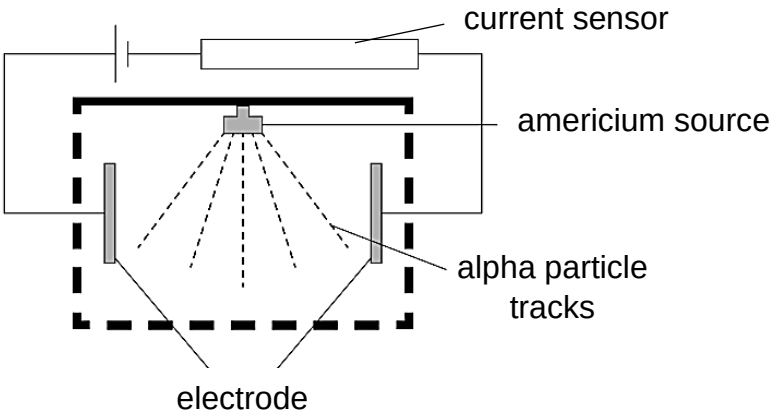


**Fig. 10.1**

**(a)** Some radioactive sources emit alpha particles, some beta particles and some gamma radiation. These different radiations have different penetrating abilities.

Place one tick (√) in each row of Table 10.1 to compare alpha, beta, gamma radiation.

**Table 10.1**

| | alpha (α) | beta (β) | gamma (γ) |
|---|---|---|---|
| Least penetrating | | | |
| Most penetrating | | | |

[1]

**(b)** Americium-241 nuclide is used in the radioactive source in Fig. 10.1. A nucleus of americium-241 emits an alpha particle as it decays.

**(i)** The radioactive decay of a nucleus is a random and spontaneous process.

**1.** Explain what is meant by a random decay.

…… [1]

**2.** Explain what is meant by a spontaneous decay.

…….. [1]
.



FREE TEST PAPERS - FREETESTPAPER.COM

**(ii)** In nuclide notation, americium-241 has 146 neutrons. This nuclide decays to neptunium through alpha emission.

Complete the nuclear equation for this decay.

$$^{241}_{\square}Am \rightarrow ^{\square}_{93}Np + ^{\square}_{\square}He$$ [2]

**(c)** Explain why this radioactive source is suitable for use in a household smoke detector.

……

…… [1]

**(d)** Table 10.2 shows the decay of Americium-241.

**Table 10.2**

| No. of years elapsed | Fraction of Am-241 Remaining |
|---|---|
| 0 | 1.000 |
| 100 | 0.841 |
| 200 | 0.708 |
| 300 | 0.595 |
| 400 | 0.500 |
| 500 | 0.420 |

With reference to the values in Table 10.2,

(i) deduce, with a reason, the half-life of Americium-241.

……

……

…… [2]

(ii) suggest whether the radioactive source will need to be replaced during the typical lifespan of the detector of 10 years.

……

…… [1]

[Total: 9]



FREE TEST PAPERS - FREETESTPAPER.COM

## Section B (10 marks)

Answer **only one** of the two questions in this section.

**11** **(a)** Fig. 11.1 shows the magnetic field pattern around two permanent bar magnets. The magnets are repelling each other.

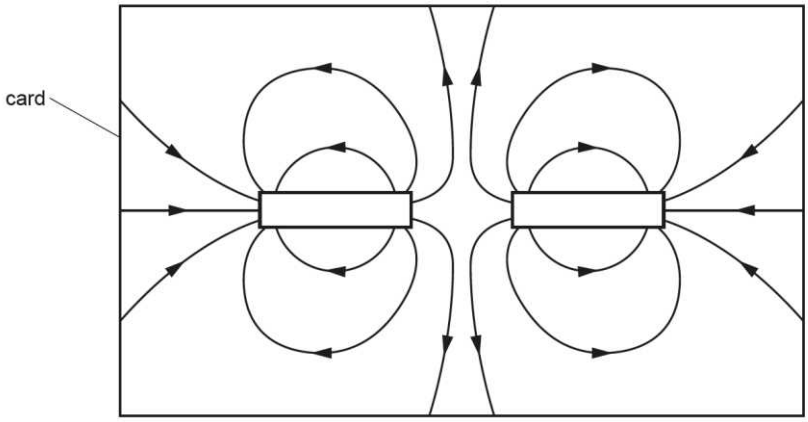


**Fig 11.1**

**(i)** On Fig 11.1, label both the poles on each bar magnet. [1]

**(ii)** Describe how to plot the shape and direction of the magnetic field pattern shown in Fig. 11.1.

……

……

……

……

……

……

……

…… [3]



FREE TEST PAPERS - FREETESTPAPER.COM

**(b)** A student demonstrates in the laboratory how different types of materials can be separated from each other during the recycling process. Fig. 11.2 shows the simple set-up comprising of a plastic tray with small pieces of aluminium foil and iron.

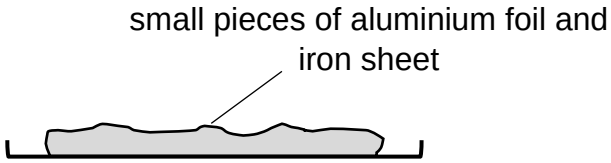


**Fig. 11.2**

**(i)** A bar magnet is placed just above the materials. Explain why the small pieces of iron are attracted to the magnet.

……

…… [2]

**(ii)** A plastic rod is uncharged. When the rod is rubbed with a woollen cloth, the rod becomes negatively charged.

**1.** Describe and explain how the rod becomes negatively charged.

……

…… [1]

**2.** The negatively charged rod is placed just above the materials in the tray. Explain why the small pieces of aluminium foil are attracted to the rod.

……

……

……

……

……

……

…… [3]

[total: 10]



FREE TEST PAPERS - FREETESTPAPER.COM

**12** A platform rests on a pivot as shown in Fig. 12.1. The centre of gravity of the platform is 0.40 m from the pivot.

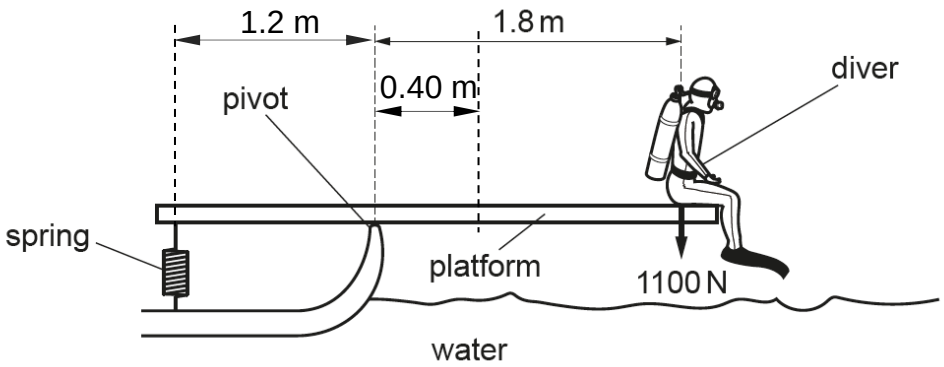


**Fig. 12.1 (not to scale)**

**(a)** State the *principle of moments*.

……

……

…… [1]

**(b)** The platform remains horizontal as the diver sits on one end.
The weight of the platform is 185 N and the weight of the diver is 1100 N.

**(i)** Calculate the downward force exerted by the spring.

downward force = …….. [2]

**(ii)** Calculate the upward force that the pivot exerts on the platform.

upward force that the pivot = …… [1]



FREE TEST PAPERS - FREETESTPAPER.COM

**(c)** Fig. 12.2 shows a manometer used to measure the pressure of the scuba cylinder used by the diver before each dive.

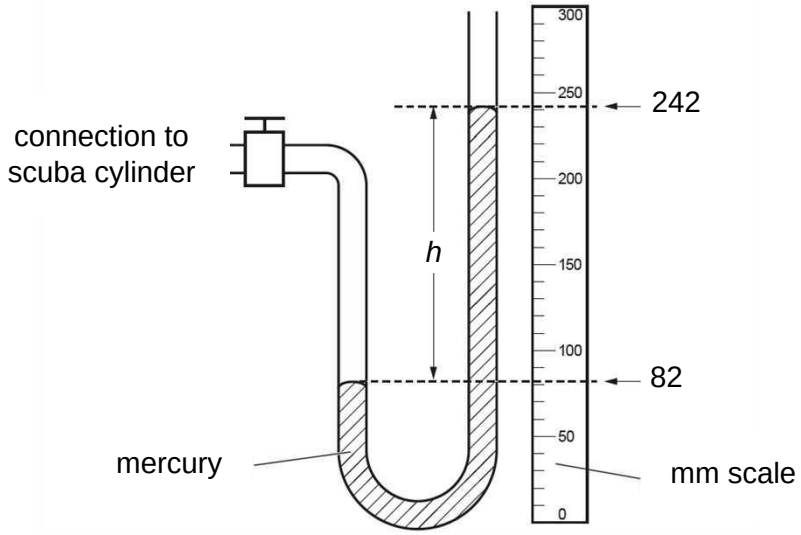


**Fig. 12.2**

The density of mercury is 13600 kg/m$^3$. The gravitational field strength g is 10 N/kg.

**(i)** Determine the pressure difference between scuba cylinder and the atmosphere. Give your answer in Pa.

pressure difference = ……. Pa [2]

**(ii)** State what happens to the distance h in Fig. 12.2 if

**1.** the manometer tube is narrower

…….. [1]

**2.** water is used in the manometer.

…….. [1]



FREE TEST PAPERS - FREETESTPAPER.COM

**(d)** The scuba cylinder is a non-flexible, constant volume container. The pressure of the gas in the cylinder increases as temperature increases. Hence, for safety reasons, the full cylinders are stored in a cool place.

Using ideas about particles, explain why the pressure of the gas increases as temperature increases.

……

……

…… [2]

[total: 10]

**END OF PAPER**



FREE TEST PAPERS - FREETESTPAPER.COM

**ST. NICHOLAS GIRLS' P1 (SOLUTION)**

| | | | | | | | |
|---|---|---|---|---|---|---|---|
| 1 | A | 11 | D | 21 | C | 31 | C |
| 2 | C | 12 | B | 22 | B | 32 | C |
| 3 | C | 13 | C | 23 | C | 33 | B |
| 4 | D | 14 | A | 24 | B | 34 | B |
| 5 | D | 15 | B | 25 | B | 35 | C |
| 6 | D | 16 | B | 26 | A | 36 | A |
| 7 | A | 17 | C | 27 | D | 37 | B |
| 8 | C | 18 | D | 28 | B | 38 | C |
| 9 | C | 19 | B | 29 | D | 39 | B |
| 10 | B | 20 | A | 30 | B | 40 | C |

FREE TEST PAPERS - FREETESTPAPER.COM

**2024 S4 Physics Prelim P2 Answer**

*unit penalty: deduct [1] per incorrect or missing unit.*
*s.f. penalty: least s.f. or plus one unless stated otherwise. deduct [1] per paper.*

| **Section A** | | |
|---|---|---|
| **Qn** | **Ans** | **Marks** |
| 1(a) | Speed is a scalar with only magnitude.<br>Velocity is a vector with both magnitude and direction.<br><br>speed is scalar and velocity is a vector.<br>[not acceptable, require explanation]<br>define speed and define velocity. [not acceptable] | <br>B1 |
| 1(b)(i) | 4.5 s (accept 4.3 – 4.6 s) | A1 |
| 1(b)(ii) | The firework is moving upwards from 0 to 4.5 s with decreasing velocity.<br>(It reaches the highest point at 4.5 s)<br>It is moving downwards after 4.5 s.<br>[note: graph shows only 5.0s of motion]<br><br>ecf for timing using b(i) answer | B1<br><br>B1 |
| 1(c) | 10 m/s$^2$, downward<br>10 m/s$^2$, downward [note: the misconception]<br><br>units is a must.<br>cannot be negative. | B1<br>B1 |
| 1(d) | Draw the *resultant* correctly (with label R)<br>Resultant = 5.5 x 10 = 55 m/s (to correct sf) (acceptable 54 – 57 m/s)<br> 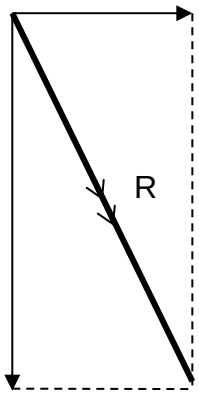 <br><br>maximum 1 mark for part (d) if no double arrow for resultant velocity | M1<br>A1 |
| 2(a) | Gravitational force acting on Earth by the barrel. | B1 |
| 2(b)(i) | Work done = mgh = 14 x 10 x 3.2<br>= 450 J (2 sf) | <br>A1 |



FREE TEST PAPERS - FREETESTPAPER.COM

| | | |
|---|---|---|
| 2(b)(ii) | Energy is transferred mechanically by a force from the chemical potential store of the farmer to the gravitational potential store of the barrel.<br><br>note: accept no mention of store eg. chemical potential energy to gravitational potential energy | B1 |
| 2(c)(i) | P = WD/t<br>75 = 450/ t<br>t = 6.0 s | <br>B1<br>B1 |
| 2(c)(ii) | taking downwards as positive,<br><br>W = mg = 140 N<br>Resultant force = ma = 7.0 N<br>140 – Fu = 14 x 0.50<br>Fu = 133 N = 130 N (2 sf) | <br><br><br><br>M1<br>A1 |
| 3(a) | Water near the base is heated and <u>expands and becomes less dense</u> than the surroundings. The heated water rises and the cooler <u>denser water at the top falls</u>. Convection currents set up. | B1<br>B1 |
| 3(b)(i) | Wood is a poor conductor of heat.<br>Slow down rate of heat transfer (to handle)<br><br>accept: thermal insulator | B1 |
| 3(b)(ii) | Shiny surface is a poor emitter of infrared radiation<br><br>annotate if student did not mention IR<br>(do not accept reflector, absorber) | B1 |
| 3(b)(iii) | Copper is a good conductor of heat.<br>Allows transfer of energy to water through heating. | B1 |
| 4(a) | Speed of light<br>Decreases | B1<br>B1 |
| 4(b)(i) | Draw a normal at E, label with X | B1 |
| 4(b)(ii) | Read c correctly<br>n = 1/ sin c<br>= 1/ sin 45° = 1.4 (2 sf)<br><br>allow ecf from 4(b)(i) | C1<br><br>A1 |
| 4(b)(iii) | Angle of incidence at AC is greater than critical angle.<br>Total internal reflection occurs at E and there is no longer any ray travelling along EC. (describe) | <br>B1 |
| 4(c)(i) | Obeys laws of reflection<br>(accept other properties found in the textbook eg transverse waves)<br>(not acceptable to mention 'does not require medium') | B1 |



FREE TEST PAPERS - FREETESTPAPER.COM

| | | |
|---|---|---|
| 4(c)(ii) | V = fλ<br>$3.0 \times 10^{8} = f\ (690 \times 10^{-9})$<br>$f = 4.3 \times 10^{14}$ Hz | <br>M1<br>A1 |
| 5(a) | $I$ varies linearly with V (resistance is constant) and passes through origin for the resistor.<br>[Do not accept: $I$ is directly proportional to V (only) ]<br>describe the features of the graph | B1 |
| 5(b) | 7.0 V.<br><br>do not accept 7 V<br>must have unit | A1 |
| 5(c) | R = V/I = 8/5.2 =1.5 Ω<br>(choose a point that can be read accurately from the grid provided)<br>(accept if V = 4 V and I = 2.6 A)<br>Rx = 1.5 x 2 /9 = 0.33 Ω (2 sf) | C1<br><br><br>A1 |
| 5(d) | Q = I x t<br>= P/V x t<br>= 12/6 x 12 x 3600<br>(C1 is for either correct sub for P/V or correct conversion)<br>= 86 000 C<br><br>Accept if student use $I$ = 4.4 A (from graph).<br>Q = 190 000 C. | <br><br>C1<br><br>A1 |
| 6(a) | $V_{out}$ = 600/(600 + 8000) x 12<br>= 0.84 V | C1<br>A1 |
| 6(b)(i) | V = 12 V – 8.0 V = 4.0 V | B1 |
| 6(b)(ii) | 4/12 = 8000/ (R + 8000)<br>R = 16000Ω | A1 |
| 6(c) | When light is dim, Vout is low and when light is bright, $V_{out}$ is high.<br>The light will switch on when the light is bright. | B1<br>B1 |
| 7(a) | First finger – magnetic field<br>Second finger – current | <br>A1 |
| 7(b)(i) | split-ring commutator<br>carbon brush(es) | <br>A1 |
| 7(b)(ii) | Interaction of magnetic field from current and permanent magnet produces an upward force at the side of coil near to N-pole, while the side of the coil near to S-pole acts downward. (or using Fleming's LHR)<br>The pair of forces create a turning effect (couple) about the axle. | B1<br><br><br>B1 |



FREE TEST PAPERS - FREETESTPAPER.COM

| | | |
|---|---|---|
| 8(a) | As the copper rod rolls down, there is cutting of magnetic flux,<br>by Faraday's Law of EMI, an emf is induced in the rod.<br>OR<br>There is an increase in the area of circuit (including rod. Rail & voltmeter) and hence an increase in magnetic flux linking the circuit (rod and wires), by Faraday's Law of EMI, an emf is induced in the rod. | B1<br>B1<br><br>B1<br>B1 |
| 8(b) | deflect more<br>The rod rolls faster, increase in the rate of change of magnetic flux | B1 |
| 8(c) | The circuit is closed, there is induced current.<br>By Lenz's Law, the direction of the induced current opposes the change (downward movement) producing it. This slows down the movement. | B1<br>B1 |
| 9(a)(i) | 80°C | A1 |
| 9(a)(ii) | 26 min | A1 |
| 9(b)(i) | P = IV = 2.5 x 50.0<br>= 130 W (2 sf) | <br>A1 |
| 9(b)(ii) | energy supplied = 125 x 9 x 60 = 67500 J<br>0.80 Pt = $mL_f$<br>0.80 x 125 x 9 x 60 = 200 $L_f$<br>$L_f$ = 270 J/g | B1<br><br>C1<br>A1 |
| 9(c) | Lv is larger than Lf. (in the ratio of 14:9)<br>The time taken needed for the change in state is longer. | B1<br>B1 |
| 9 (d) | Straight line instead of curve<br>No change in the melting and boiling point. | B1<br>B1 |
| 9 (e) | Internal energy is an energy store that is made up of the total kinetic energy associated with the random motion of the particles and the total potential energy between the particles in the system (wax). | B1 |
| 10(a) | Tick in alpha (least) and gamma (most) | A1 |
| 10(b)(i) 1. | The exact time when a nucleus decay cannot be pre-determined | B1 |
| 10(b)(i) 2. | Not triggered/ affected by external factors such as temperature and pressure. | B1 |
| 10(b)(ii) | $^{241}_{95}Am \rightarrow {}^{237}_{93}Np + {}^{4}_{2}He$<br>1 mark for correct values for Am and Np<br>1 mark for correct values for He | <br>A1<br>A1 |
| 10(c) | Emits alpha which will not penetrate through the detector. | B1 |



FREE TEST PAPERS - FREETESTPAPER.COM

| | | |
|---|---|---|
| 10(d)(i) | Since half-life is the average number of years for the radioactive substance to decay to half of its original amount,<br>the half-life is 400 years | C1<br><br>A1 |
| 10(d)(ii) | The decrease in activity is insignificant comparing to the half-life and the lifespan of 10 years. | B1 |
| 11(a)(i) | S N N S | B1 |
| 11(a)(ii) | Place the compass near the north pole of the bar magnet<br>Mark the end points of the compass needle on the paper eg X and Y<br>Move the compass so that one end of the compass coincides with one of the marked points.<br>Mark a third point at the other end of the compass needle. Continue doing this until the compass reaches the south pole. Join the dots smoothly to get one magnetic field line. | B1<br><br>B1<br><br>B1 |
| 11(b)(i) | As iron is a magnetic material, the bar magnet will magnetise the pieces of iron with an opposite pole on the side facing the magnet.<br>Unlike poles attract. | B1<br><br>B1 |
| 11(b)(ii) 1. | Electrons transferred from woollen cloth to rod. Rod has excess negative charges. | B1 |
| 11(b)(ii) 2. | The electrons on the upper surface of aluminium will be repelled by the rod, leaving more positive charges on upper surface and more negative charges on lower surface.<br>There is a force of attraction on the upper surface and force of repulsion on the lower surface.<br>However, the upper surface is closer to the rod and so attraction is stronger.<br>Hence, the aluminium foil is attracted. | B1<br><br>B1<br><br>B1 |
| 12 (a) | When a body is in equilibrium, sum of clockwise moments about a pivot is equal to sum of anticlockwise moments about the same pivot. | B1 |
| 12(b)(i) | Take moments about the pivot,<br>F x 1.2 = 185 x 0.40 + 1100 x 1.8<br>F = 1700 N | <br>C1<br>B1 |
| 12(b)(ii) | F = 1700 +185 +1100<br>= 2990 N<br>= 3000 N (2 sf) | A1 |
| 12(c)(i) | P = hpg = (242 – 82)/1000 x 13600 x 10<br>= 22 000 Pa (2 sf) | C1<br>A1 |



FREE TEST PAPERS - FREETESTPAPER.COM

| | | |
|---|---|---|
| 12(c)(ii) 1. | No change in distance | B1 |
| 12(c)(ii) 2. | Distance h increases | B1 |
| 12(d) | As temperature increases, average kinetic energy/ speed increases.<br>Frequency of collisions increases and greater force exerted onto walls of the cylinder for each collision. | B1<br><br>B1 |



FREE TEST PAPERS - FREETESTPAPER.COM