Visit

FREETESTPAPER.com

for more papers

Website: freetestpaper.com

Facebook.com/freetestpaper

Twitter.com/freetestpaper

ST JOSEPH'S INSTITUTION
PRELIMINARY EXAMINATION 2020
(YEAR 4)

CANDIDATE NAME	
CLASS	INDEX NUMBER

PHYSICS **6091/01**

Paper 1 **17 SEPTEMBER 2020**

Additional Materials: Multiple Choice Answer Sheet **1 hour (09:45 – 10.45)**

READ THESE INSTRUCTIONS FIRST

Write in soft pencil.
Do not use staples, paper clips, glue, or correction fluid.
Write your name, class and index number in the spaces provided.

There are **forty** questions on this paper. Answer **all** questions.
For each question there are four possible answers **A, B, C** and **D**.
Choose the **one** you consider correct and record your choice in **soft pencil** on the separate Multiple Choice Answer Sheet.

Each correct answer will score one mark. A mark will not be deducted for a wrong answer.
Any rough working should be done on this question paper.

This document consists of **17** printed pages including this cover page.

FREE TEST PAPERS - FREETESTPAPER.COM

1 Which of the following is made up of a base unit and a derived unit?

A ampere and joule
B coulomb and volt
C kelvin and second
D pascal and newton

2 The diagram shows a vernier scale.

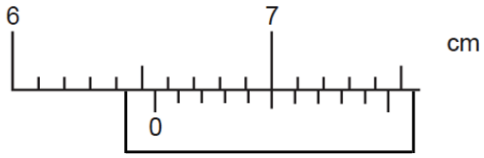

What is the reading on the vernier scale?

A 6.45 cm
B 6.47 cm
C 6.55 cm
D 6.57 cm

3 A 100 g mass is released from rest above a table-top. The mass reaches the table-top with a velocity of 5.0 m/s. What is the distance travelled by the 100 g mass? *(Assume that the air resistance is negligible.)*

A 1.3 m **B** 2.5 m **C** 10 m **D** 50 m

4 A stone is thrown vertically upwards on the moon. Which of the following graphs show(s) the correct motion of the stone? *(Assume that the air resistance is negligible.)*

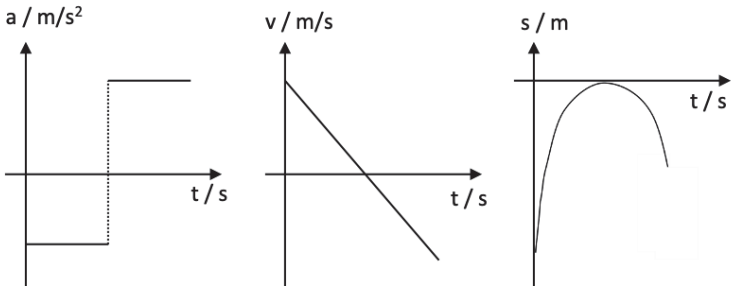

Graph (i) Graph (ii) Graph (iii)

A Graph (ii) only
B Graph (i) and Graph (ii) only
C Graph (ii) and Graph (iii) only
D Graph (i), Graph (ii) and Graph (iii)

FREE TEST PAPERS - FREETESTPAPER.COM

5 A MRT train travels from Toa Payoh station to Bishan station. It accelerates uniformly from rest to reach 20 m/s in 2.0 min. It then travels at 20 m/s for 4.0 min before coming to a stop with a uniform deceleration for 2.0 min.

What is the average speed of the MRT train as it travels from Toa Payoh station to Bishan station?

A 7.2 m/s **B** 9.0 m/s **C** 10 m/s **D** 15 m/s

6 When a resultant force is applied to a body, several effects are possible.
Which of the following effects could not occur?

A The body changes direction at a constant speed.
B The body rotates about a fixed point
C The body slows down.
D The mass of the body decreases.

7 A 1000 kg submarine travels horizontally at a depth of 200 m. Its acceleration is 0.10 m/s^2 when the propeller exerts a force of 300 N onto the water.

What is the force the water exerts on the propeller?

A 100 N **B** 200 N **C** 300 N **D** 400 N

8 An object moves horizontally from rest when a constant force of 5.0 N acts on it. The graph below shows how the velocity of the object changes with time.

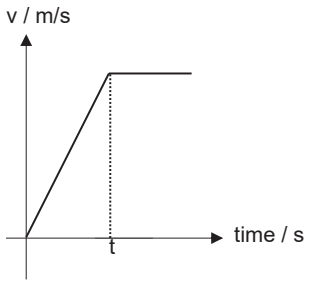

Which of the following best describes the magnitude of the frictional force?

	Before time = t	After time = t
A	not constant and less than 5.0 N	constant and 0 N
B	not constant and less than 5.0 N	constant and 5.0 N
C	constant and less than 5.0 N	constant and 5.0 N
D	constant and less than 5.0 N	constant and 0 N

FREE TEST PAPERS - FREETESTPAPER.COM

9 Four forces are applied to a circular object as shown.

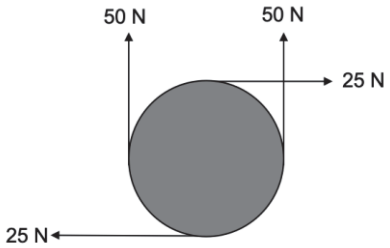

Which of the following gives the correct resultant moment and resultant force on the object?

	Resultant moment	Resultant force
A	zero	Zero
B	non zero	Zero
C	zero	non zero
D	non zero	non zero

10 A liquid X has half the density of liquid Y. At a depth of h in liquid X, the pressure due to the liquid **only** is 4P.

What is the depth in liquid Y where the pressure due to liquid Y **only** is 9P?

A 4h/9
B 9h/8
C 9h/4
D 9h/2

11 The figure shows a cup filled with water and covered with a piece of cardboard.

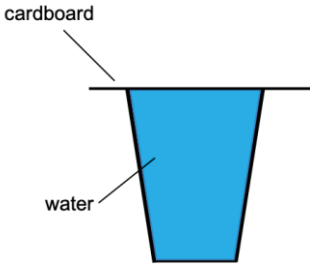

The cup is then inverted but the cardboard remains in place and the water does not flow out of the cup. Which of the following explains why this happens?

A The atmospheric pressure is equal to the weight of the water.
B The pressure exerted by air on the cardboard is equal to the pressure acting on the cardboard due to the weight of the water.
C The suction force of the water on the cardboard prevents it from falling.
D The upward force exerted by the air on the cardboard is equal to the weight of the water.

FREE TEST PAPERS - FREETESTPAPER.COM

12 What is the energy conversion when an object falls at terminal velocity?

A Gravitational Potential Energy => Heat + Sound Energy
B Gravitational Potential Energy => Kinetic Energy
C Gravitational Potential Energy + Kinetic Energy => Heat + Sound Energy
D Gravitational Potential Energy => Kinetic Energy => Heat + Sound Energy

13 A 2.5 kg electric-powered toy car travels at a constant speed of 2.0 m/s and it experiences a constant resistive force of 3.0 N.

What is the efficiency of the electric-powered toy car if the power of the electric source is 8.0 W?

A 53 % **B** 63 % **C** 75 % **D** 80 %

14 In the kinetic model of gases, what is pressure equal to?

A The average force each particle exerts when it hits and rebounds from a surface of the gas container.
B The force of particles hitting and rebounding from all the surfaces in the gas container.
C The force exerted by the particles hitting and rebounding from other particles in the gas container.
D The force exerted by the particles hitting and rebounding from a unit area of the gas container surface.

15 A gas is trapped inside a cylinder by a movable piston.

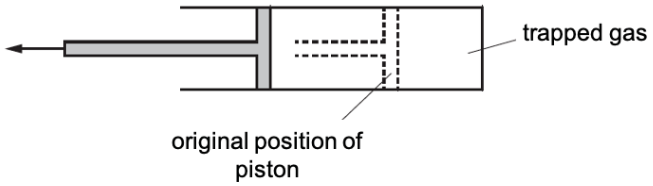

Which of the following statements describes the change in the motion of the gas particles when the piston is pulled out, keeping temperature constant?

A The speed and frequency of collision of the gas particles with the walls of the cylinder remain unchanged to maintain constant pressure.
B The speed of the gas particles decreases but the frequency of collision of the gas particles with the walls of the cylinder increases to maintain constant pressure.
C The speed of the gas particles remains unchanged and the frequency of collision of the gas particles with the walls decreases, causing a decrease in pressure.
D The speed of the gas particles decreases and the frequency of collision of the gas particles with the walls of the cylinder decreases causing a decrease in gas pressure.

FREE TEST PAPERS - FREETESTPAPER.COM

16 A heat shield is used to prevent the interior of a spacecraft from reaching very high temperature while passing through Mars' atmosphere. Which of the following thermal properties should the heat shield have in order to achieve this?

(1) Good thermal conductor
(2) High melting point
(3) High specific heat capacity

A (1) only
B (2) only
C (1) and (2) only
D (2) and (3) only

17 A cardboard box contains some water as shown. When it is heated over a Bunsen flame, the box does not catch fire even though the water is boiling. Which of the following statements explain why the box does not catch fire?

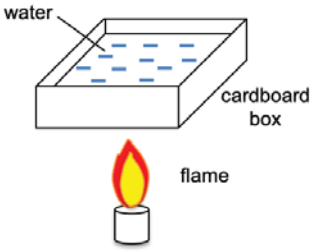

(1) Water transfers thermal energy away very quickly from the flame.
(2) The temperature of the water remains constant at 100 °C when it is boiling.
(3) There is no thermal transfer between the flame and the box.

A (1) only
B (2) only
C (1) and (2) only
D (2) and (3) only

18 The lengths of the mercury thread in a thermometer are 6.0 cm and 31.0 cm when the temperatures are 0 °C and 100 °C respectively. When the thermometer bulb is placed in a mixture of ice and salt, the mercury level is 1.5 cm below the 0 °C mark.

What is the temperature of the mixture?

A –18 °C
B –6.0 °C
C –1.5 °C
D 3.0 °C

19 The set up shown is used to carry out an experiment to determine the specific latent heat of fusion of a substance. The melting point of the substance is higher than the surrounding temperature.

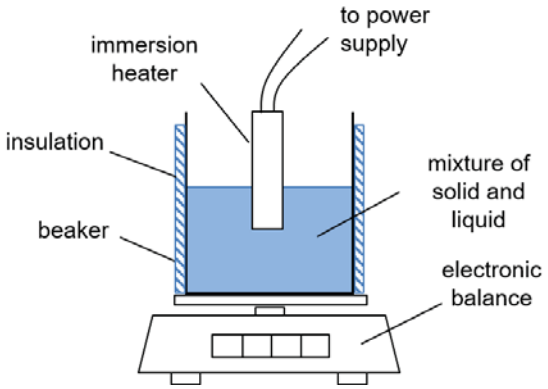

The following modifications to the set-up are made **separately**.

1. Removing the insulation from the beaker
2. Immerse the heater fully in the substance

What is the effect of each modification on the calculated value of the specific latent heat of fusion of the substance?

	modification 1	modification 2
A	decrease	increase
B	decrease	decrease
C	Increase	increase
D	Increase	decrease

20 An electric heater heats a mass of water for 5.0 minutes and the temperature of the water increases from 19℃ to 41℃. Energy is supplied at a rate of 4500 J per second to the cold water. The specific heat capacity of water is 4200 J / (kg ℃).

What is the mass of hot water provided by the heater?

A 0.049 kg
B 0.24 kg
C 0.68 kg
D 15 kg

21 In a ripple tank experiment, the frequency of a dipper is varied to investigate its effect on the water waves generated. The depth of the water in the ripple tank is uniform throughout.

Which of the following shows the correct effect of the change in frequency of the dipper on the wavelength and the speed of the water waves?

	frequency	wavelength	speed
A	decreased	increased	decreased
B	decreased	decreased	unchanged
C	increased	increased	increased
D	increased	decreased	unchanged

22 A series of circular wavefronts are produced in a pond. The diagram shows the positions of two particles, X and Y in the wave at a particular time. Point X lies on the trough of the wave and point Y on the crest of the wave. The speed of the water waves is 15 cm/s and the time taken for any particle in the wave to travel from the crest to the trough is 0.10 s.

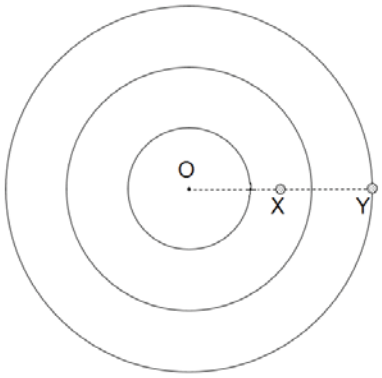

What is the horizontal distance between X and Y?

A 0.15 cm **B** 1.5 cm **C** 3.0 cm **D** 4.5 cm

23 A small cylindrical rod (not shown in the diagram) is placed in front of a mirror with its length parallel to the mirror. Four reflected rays are shown in the diagram below. Two of the reflected rays are from one end of the rod while the other two rays are from the other end of the rod.

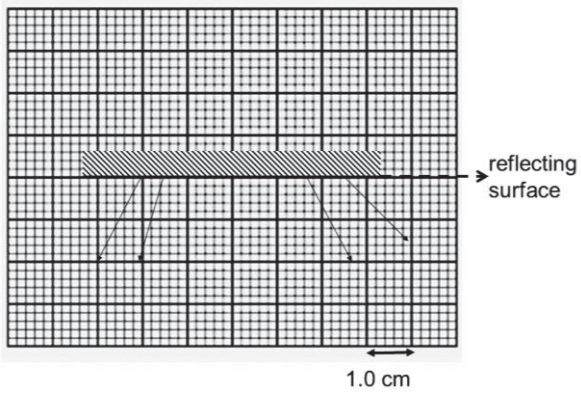

What is the length of the rod?

A 0.80 cm **B** 1.0 cm **C** 1.6 cm **D** 2.6 cm

24 The ray from a laser pointer is reflected by a plane mirror onto a wall as shown in the diagram. The reflected ray strikes the wall at point R, 3.0 cm above the ground. The ray strikes the mirror at a distance, d from point X.

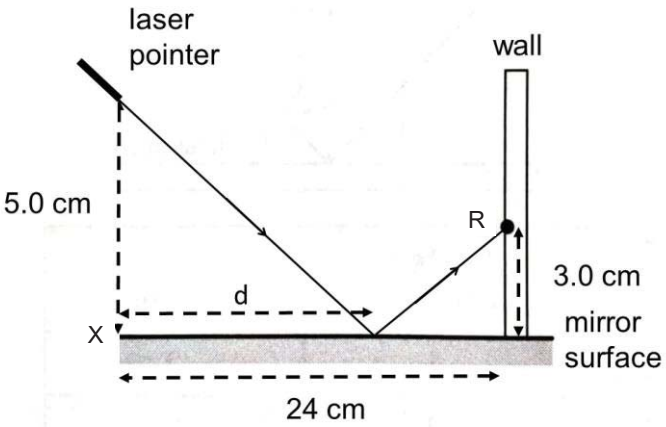

What is the distance, d?

A 3.0 cm **B** 8.0 cm **C** 9.0 cm **D** 15 cm

25 The range of wavelengths of visible light is between 4.0×10^{-7} m to 7.0×10^{-7} m.

Which of the following are possible wavelengths for infrared, red and violet light in metres?

	infrared / m	red light / m	violet light / m
A	1.0×10^{-4}	7.0×10^{-7}	4.0×10^{-7}
B	1.0×10^{-7}	7.0×10^{-4}	4.0×10^{-4}
C	1.0×10^{-4}	4.0×10^{-4}	7.0×10^{-4}
D	1.0×10^{-7}	4.0×10^{-7}	7.0×10^{-4}

26 A ship sounds a foghorn and an echo is received from a cliff behind it. Which of the following wave characteristics of the original sound is/are different from that of the echo?

(1) frequency
(2) amplitude
(3) speed

A (2) only
B (3) only
C (1) and (3) only
D (2) and (3) only

27 A loudspeaker is placed between a wall and a student standing 100 m away from the wall. When a sound is produced by the loudspeaker, the student hears two sounds 0.36 s apart. Given that the speed of sound is 330 m/s, what is the distance between the student and the loudspeaker?

A 41 m
B 59 m
C 69 m
D 81 m

FREE TEST PAPERS - FREETESTPAPER.COM

28 A positively charged rod is brought near two neutral sphere P and Q which are in contact as shown. P is momentarily earthed and Q is moved away from P. The rod is then removed.

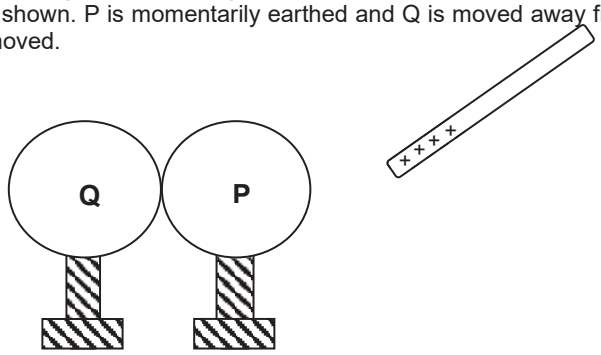

Which of the following best describes the final charge distribution on P and Q?

	P	Q
A	positive	negative
B	negative	neutral
C	positive	neutral
D	neutral	neutral

29 The figure shows the position of conductor A that was freely suspended by an insulating string when conductor B was brought near to conductor A.

Conductor B was earthed momentarily while conductor A stayed near to it. It was observed that after the earthing was performed, the position of conductor A was closer to B.

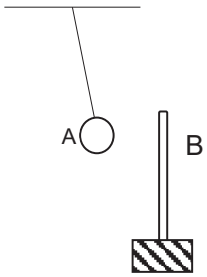

Which of the following best describes conductor A and B?

A Conductor A is positively charged.
B Conductors A and B have like charges.
C Conductor A is charged, but conductor B is neutral.
D Conductor B is charged, but conductor A is neutral.

30 In the circuit shown, the switches S_1 and S_2 may be opened or closed.

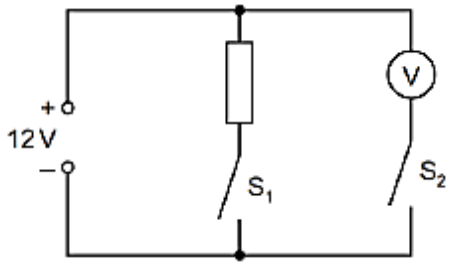

Which of the following shows the correct voltmeter reading corresponding to the position of the switches?

	S_1	S_2	Voltmeter reading /V
A	closed	closed	0
B	closed	open	12
C	open	closed	12
D	open	open	12

31 The diagram shows the I/V characteristic graphs for two electrical components P and Q.

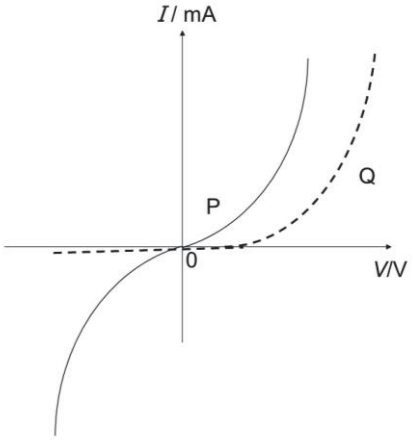

Which of the following statements best describes the two electrical components?

A P is a light-emitting diode and its resistance decreases as potential difference increases.

B P is a thermistor and its resistance increases as potential difference increases.

C Q is a light-emitting diode and its resistance decreases as potential difference increases.

D Q is a thermistor and its resistance increases as potential difference increases.

FREE TEST PAPERS - FREETESTPAPER.COM

32 The diagram shows a simple electric circuit with three resistors connected to a battery with an electromotive force, ε. The resistance of resistor P is half that of resistor Q. The current flowing through Q is 0.40 A.

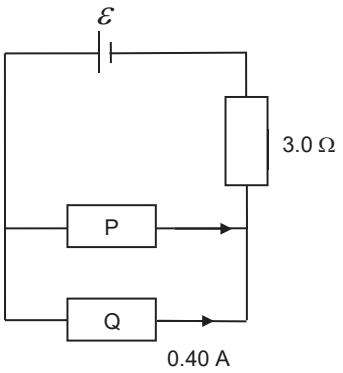

What is the potential difference across resistor P?

A $\frac{1}{2}(\varepsilon - 1.8)$ V
B $\frac{1}{3}(\varepsilon - 3.6)$ V
C $(\varepsilon - 1.8)$ V
D $(\varepsilon - 3.6)$ V

33 A uniform copper wire of length 24 cm and resistance 15 Ω is bent into the shape of an equilateral triangle ABC.

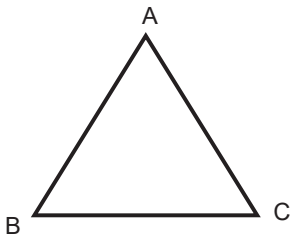

What is the effective resistance of the wire between point B and point C?

A 3.3 Ω **B** 5.3 Ω **C** 8.3 Ω **D** 25 Ω

34 A variable potential divider has a sliding contact S that can be moved between end P and end Q of a 1.0 m long resistance wire. The potential divider is connected in series to a constant 12 V power supply and a thermistor. The resistance of the thermistor can vary from 10 Ω to 70 Ω.

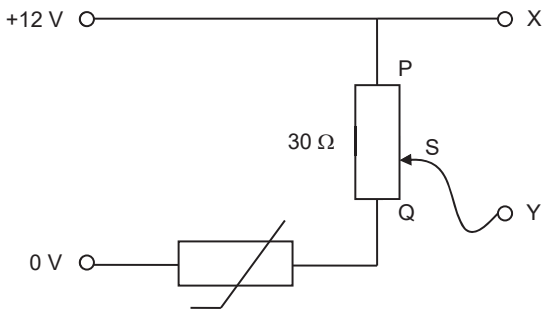

If the temperature of the thermistor is high, which of the following is a possible description of the potential difference between X and Y as S moves from P to Q?

A It decreases from 12 V to 3.6 V.
B It decreases from 9.0 V to 0 V.
C It increases from 0 V to 3.6 V.
D It increases from 0 V to 9.0 V.

35 A lamp and two resistors are connected in a circuit as shown below.

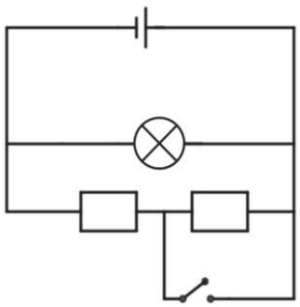

What happens to the brightness of the lamp when the switch is closed?

A It becomes brighter.
B It becomes dimmer.
C It remains the same.
D It blows off.

36 A student connects an 8 A fuse in series with a lamp as shown in the diagram.

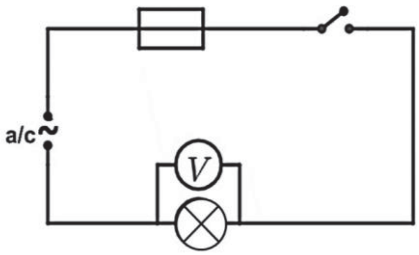

When the switch is closed, the lamp blows but the fuse did not melt.
What could have caused this?

A The fuse rating is too high for the lamp.
B The lamp is connected to an alternating current.
C The lamp is not earthed.
D The voltmeter's high resistance prevents current from flowing in the circuit.

37 The diagram shows a typical ring circuit diagram that is commonly used in a house.

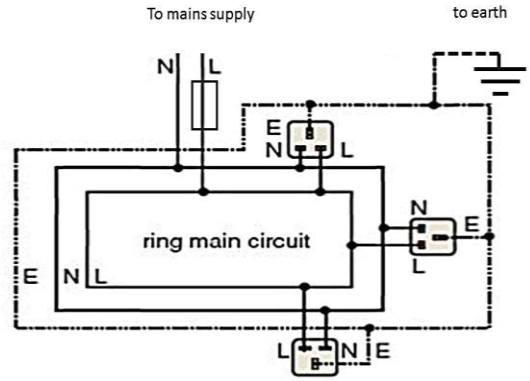

Which of the following is not an advantage of using a ring circuit?

A Each appliance can be switched on or off individually.
B Each appliance can have its own individual fuse rating.
C It allows new power sockets to be added easily.
D The circuit is less likely to be overloaded.

38 Two permanent magnets are placed on a flat horizontal surface. A plotting compass is placed in the position shown in the diagram.

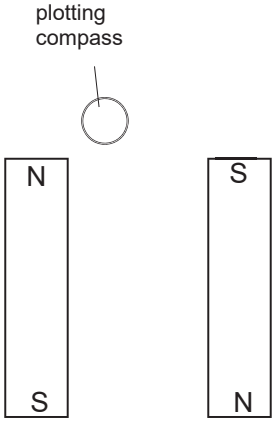

Which direction will the plotting compass point to? (Ignore any effect of the Earth's magnetic field)

A **B** **C** **D**

39 Which of the following is the best way to demagnetize a magnetized steel needle?

A Break it into two pieces.
B Heat it and then let it cool.
C Leave it inside a solenoid carrying direct current.
D Slowly pull it out of a solenoid carrying alternating current.

40 The figure below shows the cross section of a moving coil loudspeaker. When a current flows in the coil of wire, a force is exerted on the cone which causes it to move.

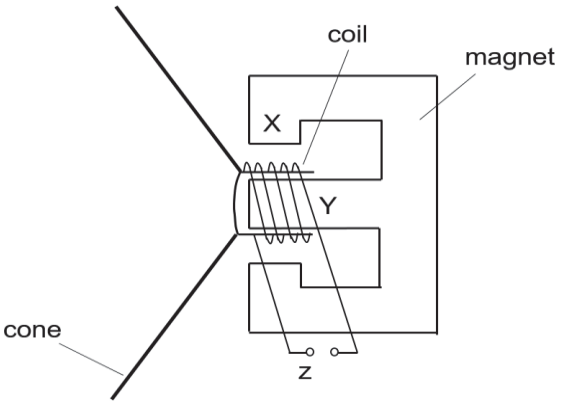

Which of the following options results in the loudspeaker cone moving in the correct direction?

	polarity of X	polarity of Y	polarity of terminal Z	direction of force on cone
A	North	South	Negative	Right
B	South	North	Negative	Right
C	North	South	Positive	Left
D	South	North	Positive	Right

ST JOSEPH'S INSTITUTION
PRELIMINARY EXAMINATION 2020
(YEAR 4)

CANDIDATE NAME	

CLASS						INDEX NUMBER			

PHYSICS **6091/02**

Paper 2 **14 September 2020**

1 hour 45 minutes
(11:30 – 13.15)

READ THESE INSTRUCTIONS FIRST

Write your name, class and index number on the cover page of this Question Paper and all the work you hand in.
Write in dark blue or black pen on both sides of the paper.
You may use a soft pencil for any diagrams or graphs.
Do not use staples, paper clips, glue or correction fluid.

Section A
Answer **all** questions on the Question paper.

Section B
Answer **all** questions. Question 12 has a choice of parts to answer.

Candidates are reminded that **all** quantitative answers should include appropriate units.
Candidates are advised to show formulae and all their working in a clear and orderly manner, as more marks are awarded for sound use of Physics than for correct answers.

At the end of the examination, fasten all your work securely together.
The number of marks is given in brackets [ ] at the end of each question or part question.

Section A								
Q1	Q2	Q3	Q4	Q5	Q6	Q7	Q8	Q9

For Examiner's Use	
Section A	/ 50
Section B	/ 30
Total	/ 80

This document consists of **23** printed pages including this cover page

FREE TEST PAPERS - FREETESTPAPER.COM

Section A (50 marks)

Answer all questions in this section.

1. A parachutist jumps off from an aeroplane which is travelling at a constant horizontal velocity of 1.5 m/s. The parachutist falls at a uniform vertical acceleration of 10 m/s^2 for 5.0 s before he opens the parachute. Fig 1.1 shows the vertical velocity-time graph of the parachutist for the first 5.0 s of the jump.

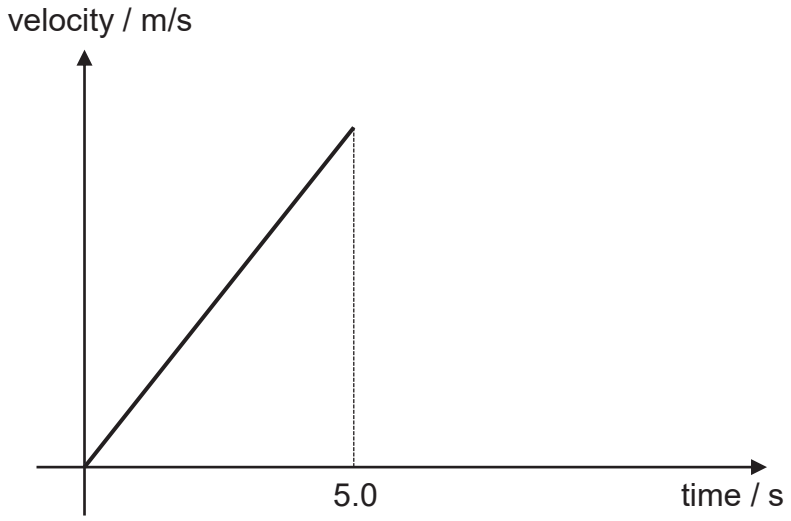

Fig. 1.1

(a) Explain what is meant by 'the aeroplane is travelling at a constant horizontal velocity of 1.5 m/s.

……..

……..[1]

(b) Explain why the parachutist did not fall vertically downward initially.

……..

……..[1]

(c) Determine the vertical distance travelled by the parachutist during the first 5.0 s of the jump.

vertical distance = ... [2]

FREE TEST PAPERS - FREETESTPAPER.COM

(d) At 5.0 s, the parachute opens. The vertical velocity of the parachutist decreases at a decreasing rate until his vertical velocity is constant again.

(i) On Fig. 1.1, continue the velocity-time graph of the parachutist until his vertical velocity is constant again. [1]

(ii) Explain in terms of forces, why the vertical velocity of the parachutist

(1) decreases when the parachute opens and

……

……[2]

(2) finally reaches a constant value.

……

……[1]

2 A woman drives a car of mass 3000 kg with a maximum driving force of 40 kN. The constant frictional force acting on the car is 1000 N.

(a) At one instant, the acceleration of the car is 5.0 m/s^2. Determine the air resistance acting on the car at this instant.

air resistance = ... [2]

(b) Explain why the velocity of the car increases at a decreasing rate, even though the driving force is maximum.

……..

……..

……..[2]

FREE TEST PAPERS - FREETESTPAPER.COM

3 Fig. 3.1 shows two modified syringes, filled with liquid and enclosed by two frictionless pistons. One end of the syringe is connected to a manometer. The cross-sectional area of piston A and B are 0.50 cm^2 and 2.00 cm^2 respectively. When a force, F acts on piston B, the liquid exerts a force of 8.0 N on piston A. The atmospheric pressure is 1.0×10^5 Pa.

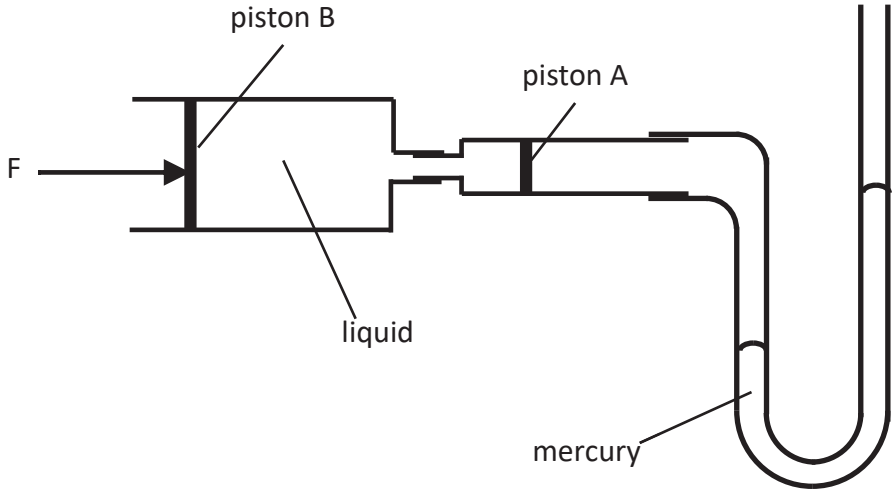

Fig. 3.1

(a) Determine the pressure of the liquid acting on piston A in Pa.

pressure = ... [1]

(b) Determine the force, F acting on piston B.

force = ... [2]

(c) If the density of mercury is 13 600 kg/m^3, determine the difference in the mercury levels of the manometer.

difference in levels = ... [1]

FREE TEST PAPERS - FREETESTPAPER.COM

(d) Explain how your answer to **part (c)** would be different if the following modifications are made to the manometer.

(i) The manometer tube is replaced with another tube of larger cross-sectional area.

……

……[1]

(ii) The mercury is replaced with water.

……

……[1]

4 A man pushed a box of mass 40 kg along a straight horizontal path. Fig. 4.1 shows how the force exerted by the man varied with the distance moved by the box.

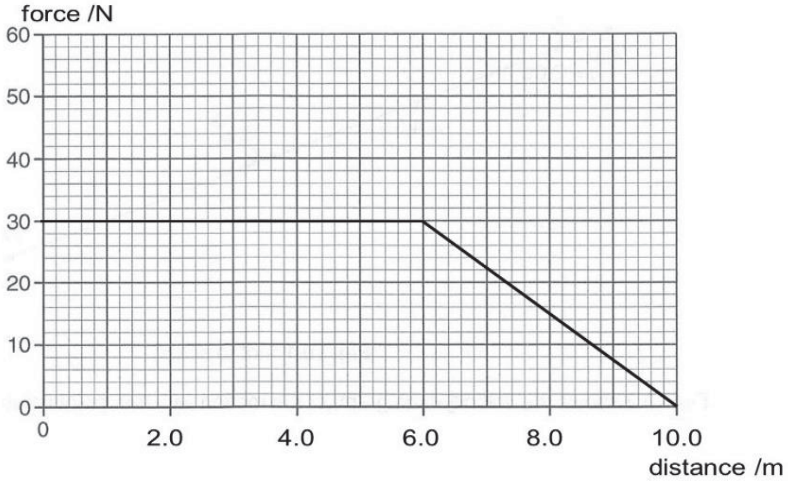

Fig. 4.1

(a) The box started from rest and reached a velocity of 1.5 m/s after it travelled a distance of 6.0 m.

(i) Calculate the gain in kinetic energy of the box.

kinetic energy gained = …… [1]

(ii) Calculate the resistive force experienced by the box as it travelled a distance of 6.0 m.

resistive force = …….. [2]

FREE TEST PAPERS - FREETESTPAPER.COM

(b) Using Fig. 4.1, state and explain how far the box was pushed before it stopped gaining kinetic energy.

……

……

……

……[2]

(c) Given that the man pushed the box for a total duration of 10 s, calculate the average power exerted by the man.

average power = …… [1]

5 A projector is able to magnify an object by 5 times if the screen is 1.5 m away from the object.

(a) If the height of the object is 1.5 cm, construct a ray diagram to determine the focal length of the converging lens used by the projector.

focal length = ... [3]

(b) When constructing the converging lens, a spherical air bubble was formed in the lens. Fig. 5.1 shows 3 light rays incident on the spherical air bubble, where O is the centre of the air bubble.

FREE TEST PAPERS - FREETESTPAPER.COM

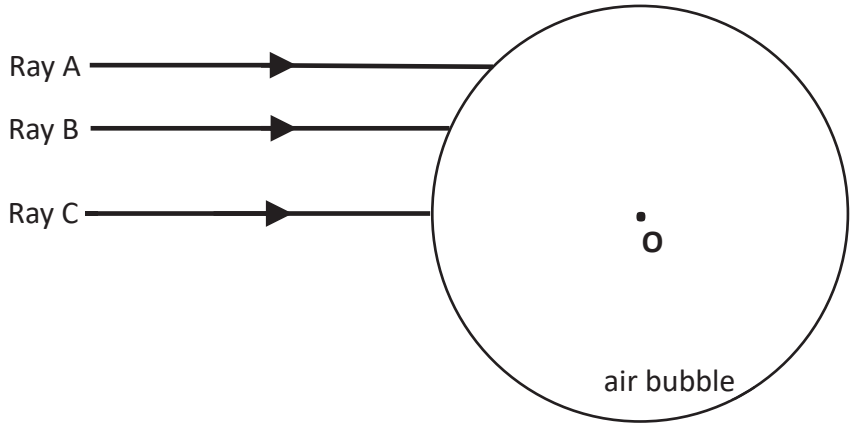

Fig. 5.1

(i) Ray B refracts at a tangent to the spherical air bubble. The refractive index of the converging lens is 1.5.
Calculate the angle of incidence of ray B.

angle of incidence = ... [1]

(ii) Continue the paths of ray A and ray C until they emerge from the air bubble.

[2]

FREE TEST PAPERS - FREETESTPAPER.COM

6 Fig. 6.1 shows two vertical metal plates mounted on insulating stands that are a short distance apart. A high voltage d.c. supply is used to charge the plates. A charged conducting ball is suspended by a nylon thread clamped at Y as shown. The clamp is equidistant from both the metal plates.

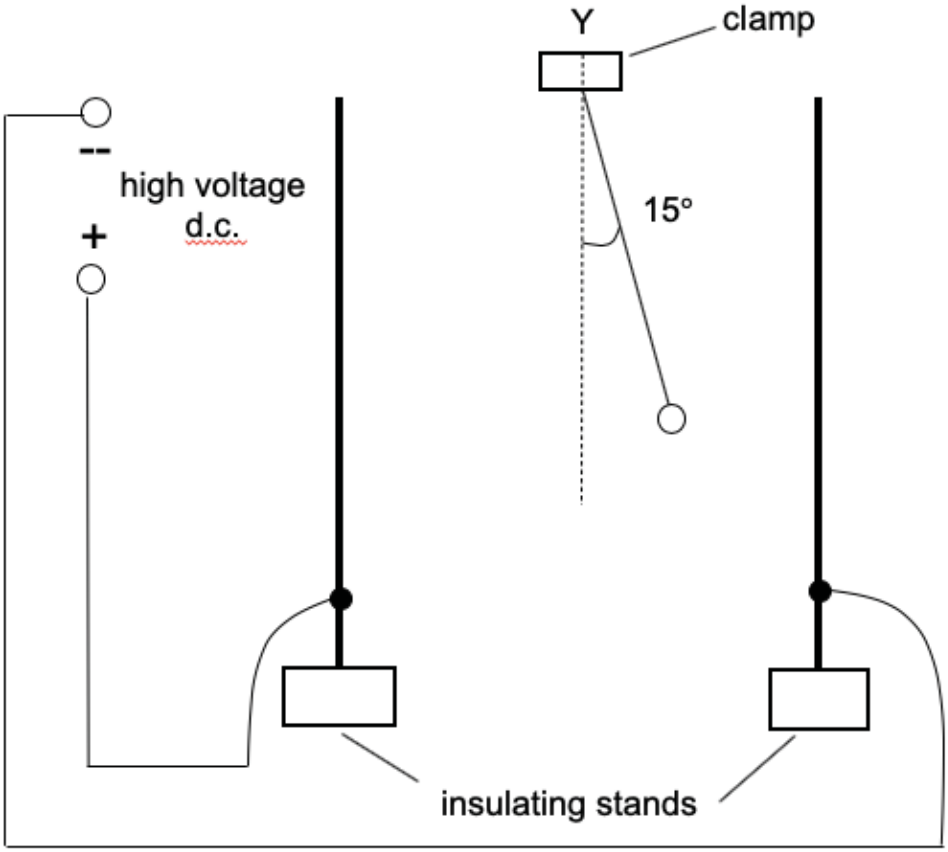

Fig. 6.1

(a) The rest position of the ball is such that the thread makes an angle of 15° to the vertical.

(i) State and explain whether the charge on the ball is positive or negative.

……...

……...

…….. [2]

(ii) Describe and explain the change, if any, to the angle of inclination when the clamp is moved horizontally to the right without the ball touching the metal plate.

……....

……....

…… [1]

FREE TEST PAPERS - FREETESTPAPER.COM

(b) The clamp is returned to its original position and the plates are moved closer together until the plate on the right touches the ball, as shown in Fig. 6.2.

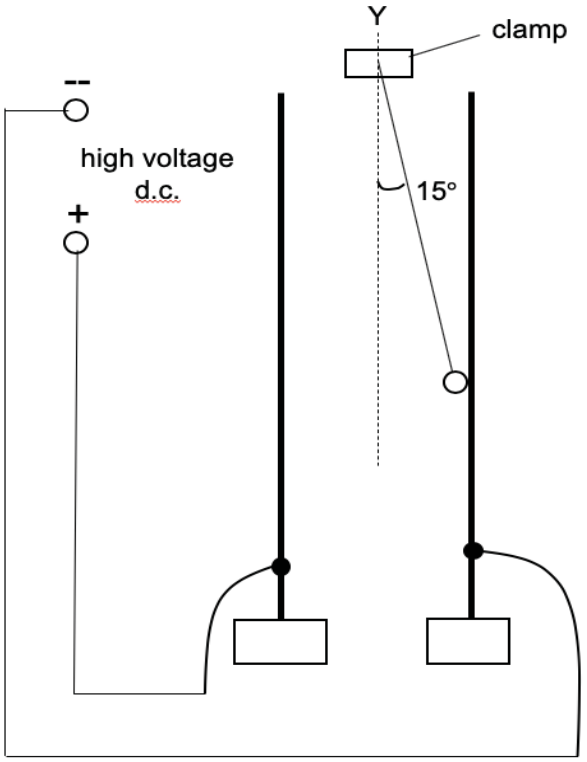

Fig. 6.2

Describe and explain the subsequent motion of the ball in terms of electron transfer.

……...

……...

……..... [2]

FREE TEST PAPERS - FREETESTPAPER.COM

7 A student sets up the circuit in Fig. 7.1 to investigate the current-voltage characteristics of a filament lamp.

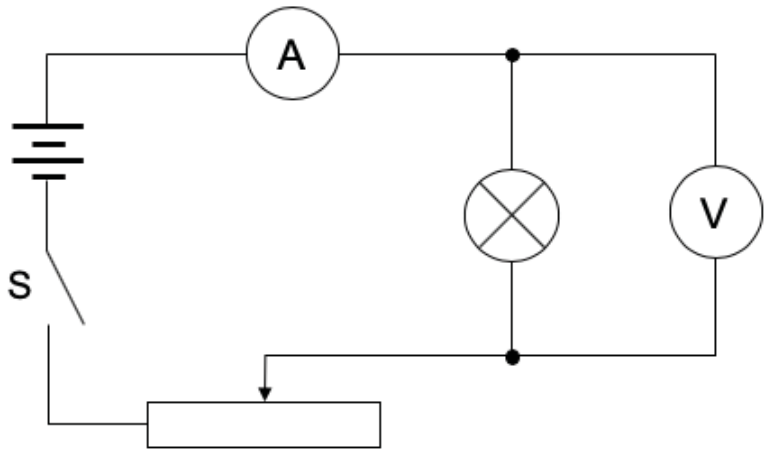

Fig. 7.1

The following ammeter and voltmeter readings are obtained when the variable resistor is set to the maximum and minimum resistance.

Resistance of variable resistor	voltage/V	current/A
Maximum	0.60	0.16
Minimum	2.80	0.22

Table 7.1

(a) The resistance of the variable resistor is set to the maximum value and the switch is closed for 2.0 minutes.

(i) Calculate the amount of charge flowing through the filament lamp in 2.0 minutes.

charge = ... [1]

(ii) Hence, calculate the amount of energy dissipated in the filament lamp in 2.0 minutes.

energy = ... [1]

(b) **(i)** Explain, in terms of particles, why the resistance of the filament lamp increases as voltage increases.

.....

.....

.....

..... [2]

FREE TEST PAPERS - FREETESTPAPER.COM

8 A student held a permanent magnet directly above a small paper clip of negligible mass. The paper clip was connected to a bench by a string.

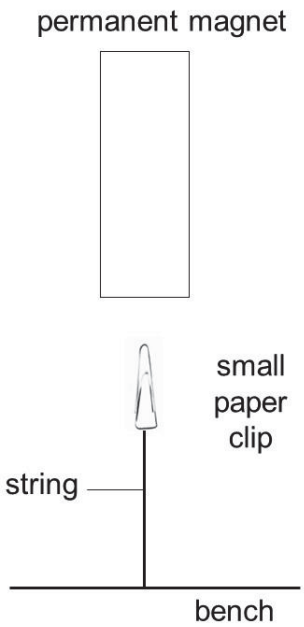

Fig. 8.1

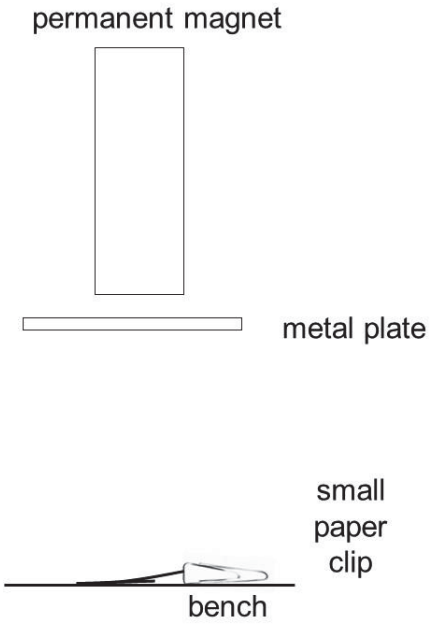

Fig. 8.2

(a) Explain why the small paper clip is attracted to the magnet shown in Fig. 8.1.

……...

……...

……...

…… [2]

(b) When an iron plate is placed between the magnet and the small paper clip as shown in Fig. 8.2, the paper clip fell to the bench. Explain this observation.

……...

……...

……...

…… [2]

FREE TEST PAPERS - FREETESTPAPER.COM

9 Fig. 9.1 shows a wire bent into a U shape frame labelled ABCD supported on two knife edges. The knife edges support the wire at P and Q.

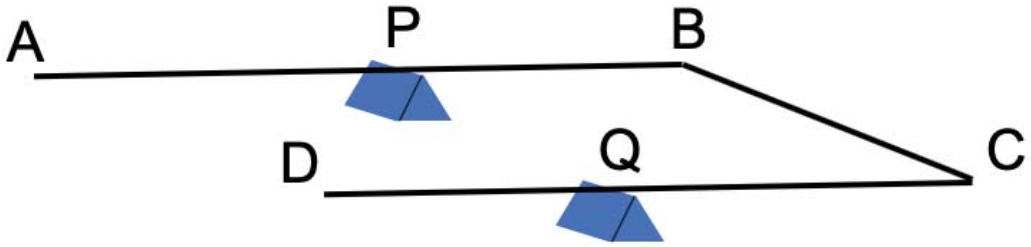

Fig. 9.1

The section PBCQ of the wire frame is then placed within a coil of wire. The top view of the set-up is as shown in Fig. 9.2.
The electrical source is connected in parallel to the coil of wire and the wire frame. The wire frame is horizontal when the switch S is opened.

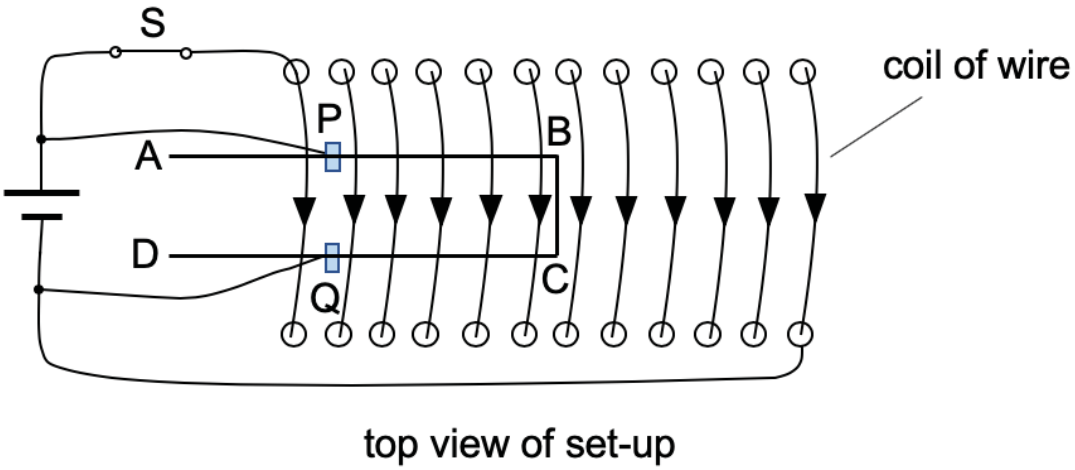

Fig. 9.2

(a) When the switch S is closed, current flows into the wire frame and coil of wire. Current from the source flows into the wire frame at P and leaves via Q.

(i) A magnetic field line passes through the centre of the coil of wire. Draw and label the direction of this magnetic field line on Fig. 9.2. [1]

(ii) When a current flows in the frame, the frame rotates about the knife edge. Draw an arrow on Fig. 9.1 to indicate the direction of the force on BC and explain your answer.

……

……

……

…….. [2]

FREE TEST PAPERS - FREETESTPAPER.COM

(b) Describe the effect on the rotation of the coil if the terminals of the battery are reversed.

…… [1]

(c) The coil of wire of length L is now connected to the battery as shown in Fig. 9.3.

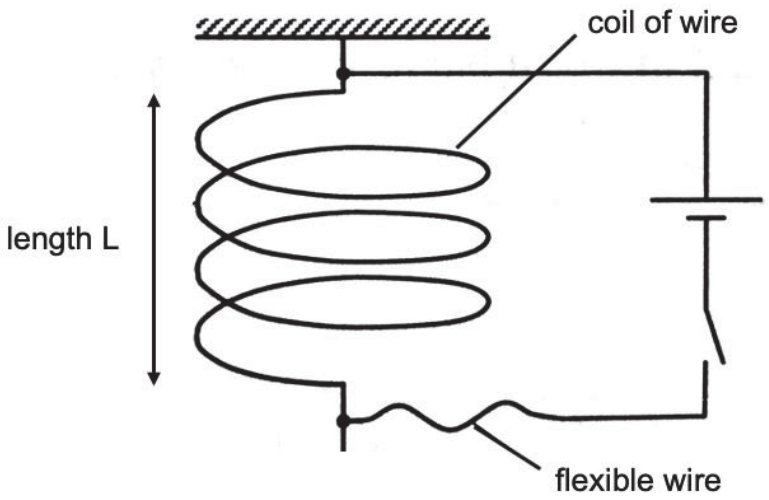

Fig. 9.3

(i) Indicate on Fig. 9.3 the direction of the current in the coil when the switch is closed. [1]

(ii) It is observed that the turns in the coil move closer when a current is flowing in the coil. Explain why this occurred.

……...

……...

……...

…… [2]

END OF SECTION A

FREE TEST PAPERS - FREETESTPAPER.COM

CANDIDATE NAME	

CLASS						INDEX NUMBER		

Section B			
Q10	**Q11**	**Q12E**	**Q12O**

Section B (30 marks)

Answer all questions in this section.

Answer only one of two alternative questions in **Question 12**.

10 Fig. 10.1 shows a heating element of a 1200 W kettle. The heating element is near to the base of the kettle. Fig. 10.2 shows the different components of the heating element. The nichrome wire is insulated by an electrical insulator and enclosed by a metal casing.

https://commons.wikimedia.org/wiki/File:Filament_in_an_electric_kettle.JPG

Fig. 10.1

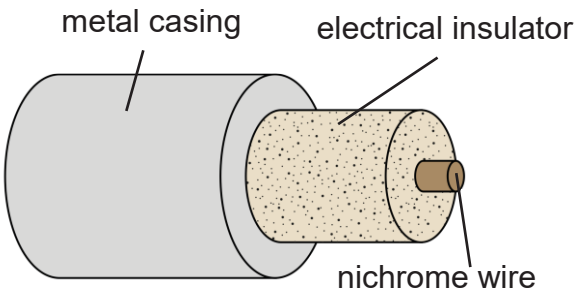

https://en.wikipedia.org/wiki/Heating_element#/media/File:Tubular_Electric_Heater.svg

Fig. 10.2

(a) Explain why the heating element is designed to be near the base of the kettle.

……..

……..

…….[2]

FREE TEST PAPERS - FREETESTPAPER.COM

(b) Explain how the following features ensure water in the kettle boils quickly.

(i) A lid for the kettle.

…….....

…….[1]

(ii) The casing of the heating element is made of metal.

……...

……...[1]

(c) Jane wants to make herself a cup of iced milo. She first boils 500 g of water using the 1200 W kettle to prepare a cup of hot milo. She then adds ice to decrease the temperature of the hot milo. The specific heat capacity of water is 4200 J/kgK.

(i) Explain what is meant by 'the specific heat capacity of water is 4200 J/kgK'.

……...

……...[1]

(ii) Determine the time taken for the temperature of the 500 g of water to increase from 30°C to 100°C.

time = ... [2]

(iii) Jane wants to decrease the temperature of the hot milo from 80°C to 15°C. Determine the amount of ice at 0°C that needs to be added.
[Heat capacity of hot milo = 900 J/K and the specific latent heat of fusion of ice = 336 kJ/kg]

mass = ... [2]

FREE TEST PAPERS - FREETESTPAPER.COM

(iv) In reality, the mass of ice that needs to be added to the milo in order for the temperature to reach 15°C is less than the mass calculated in **c(iii)**. Explain why.

……...

……...[1]

11 A temperature activated appliance makes use of an NTC thermistor to switch on the appliance when the temperature falls below a certain level. Table 11.1 shows how the resistance of the NTC thermistor varies with temperature.

Temperature/°C	Resistance/Ω
14	4960
16	4530
18	4190
20	3850
22	3520
24	3200
26	2900
28	2700
30	2500
32	2300
34	2100
36	1950
38	1800
40	1650
42	1520
44	1410

Table 11.1

(a) Using the data from Table 11.1, describe the relationship between the resistance of the thermistor and its temperature over the range shown.

……..…….

…….

…… [2]

FREE TEST PAPERS - FREETESTPAPER.COM

(b) Fig. 11.2 shows a circuit of the thermistor connected in series with a fixed resistor of resistance 4800 Ω and a 12 V d.c. supply. The circuit is designed such that when the temperature is above a certain value, a secondary circuit connected to V_{out} will be activated.

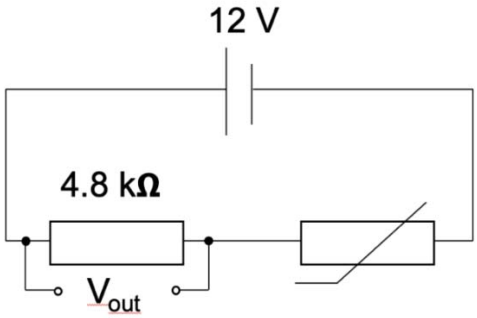

Fig. 11.2

(i) Explain why V_{out} increases when temperature increases.

……

……

…….. [1]

(ii) The minimum voltage V_{out} needed to activate the secondary circuit is 7.2 V. Determine the minimum temperature of the thermistor when the secondary circuit is activated.

temperature = …… [2]

(iii) When the temperature of the thermistor is equal to the temperature calculated in **b(ii)**, a lamp of rating '7.2 V, 12 W' is connected in parallel with the fixed resistor. Explain why the lamp will be dimmer than expected.

……..

……..

……..

…… [2]

FREE TEST PAPERS - FREETESTPAPER.COM

(c) The heat lamp was purchased in a country whose mains voltage is 110 V. It is rated 110 V, 700 W and has a 8 A fuse in its 3 pin plug.

(i) Calculate the resistance of the heat lamp when operating under the rated conditions.

resistance = ……. [1]

(ii) The heat lamp is brought to Singapore where the mains supply is 240 V. Explain, with the aid of mathematical calculations, why the fuse will blow when the heat lamp is plugged to the mains and switched on.

……..

……..

……..

…… [2]

FREE TEST PAPERS - FREETESTPAPER.COM

12 EITHER

Fig. 12.1 shows a 5.0 m long uniform diving board of mass 130 kg. The diving board is fixed to a cement staircase at point A. The diving board is supported by a movable cone at point B, 1.25 m away from point A. A girl with a weight of 450 N stands 3.0 m away from A.

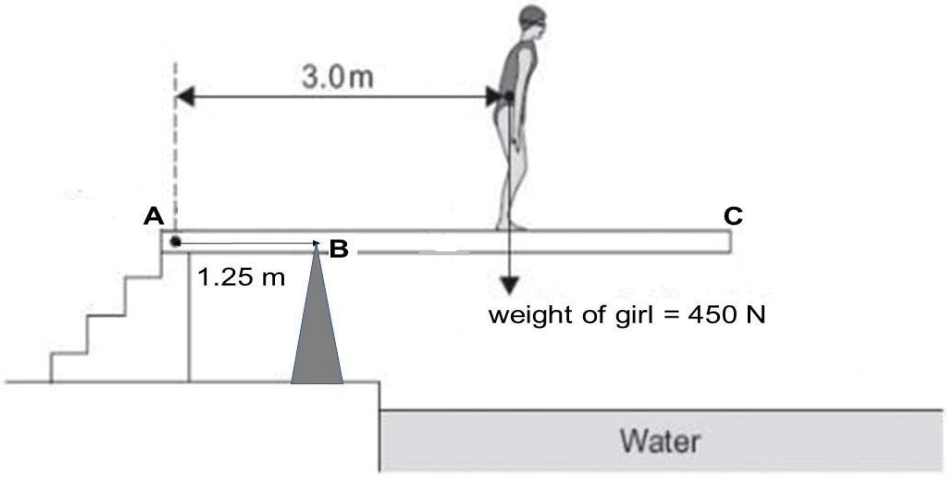

https://gcsephysicsninja.com/examquestion/moments-2/#more-7904

Fig. 12.1

(a) (i) Indicate in Fig. 12.1 the direction of the force acting on the board at A at this instant. [1]

(ii) Calculate the clockwise moment produced by the weight of the board about point A.

clockwise moment = ……..[1]

(iii) Hence, calculate the force F_B exerted by the cone on the diving board.

F_B = …… [2]

(iv) Explain, in terms of moment of a force, why the force F_B increases as the girl walks farther from A.

……..……..

……..……

…….. [2]

FREE TEST PAPERS - FREETESTPAPER.COM

(b) The diving board is made of a composite material which is made of 40% aluminium and 60% polymer by volume. If the composite density of the diving board is 1.25 g/cm^3, calculate the density of the polymer in kg/m^3, given that the density of aluminium is 2.7 g/cm^3.

density of polymer = …… [2]

(c) When the movable cone is removed from the diving board and hung using a rope at point Y, it comes to rest as shown in Fig 12.2.

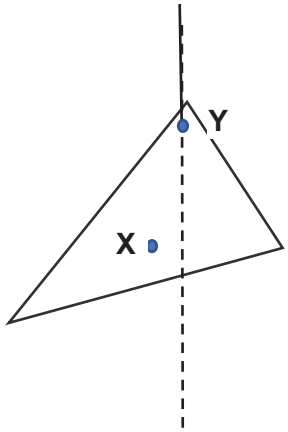

Fig. 12.2

Explain why it is not possible for point X to be the centre of gravity of the non-uniform cone.

……

……

…….. [2]

FREE TEST PAPERS - FREETESTPAPER.COM

12 OR

(a) Fig. 12.3 shows a foetus undergoing a pre-natal scan.

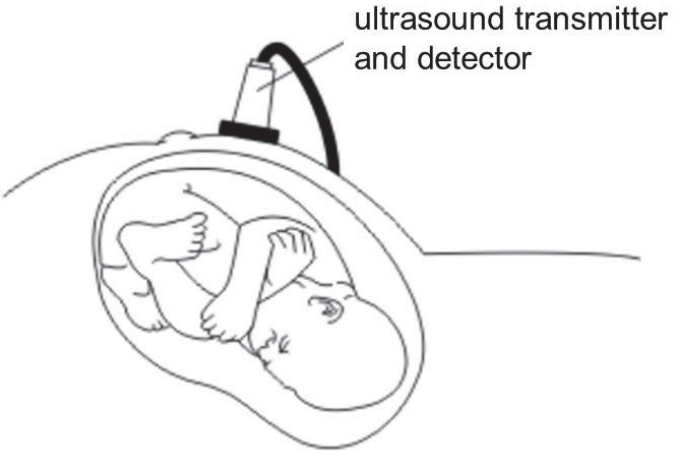

Fig. 12.3

X-rays and ultrasound can both be used for scanning internal organs.
Explain why X-rays are more harmful than ultrasound, and hence is never used in pre-natal scanning.

……

…….. [1]

(b) Describe the behaviour of ultrasound waves when they are incident at the boundary between two different materials and explain how it is used to determine distances.

……

……

……

…….. [2]

FREE TEST PAPERS - FREETESTPAPER.COM

(c) Fig. 12.4 shows two pulses taken from a particular pre-natal scan. The transmitted pulse is labelled A. The returning pulse picked up by the detector is labelled B.

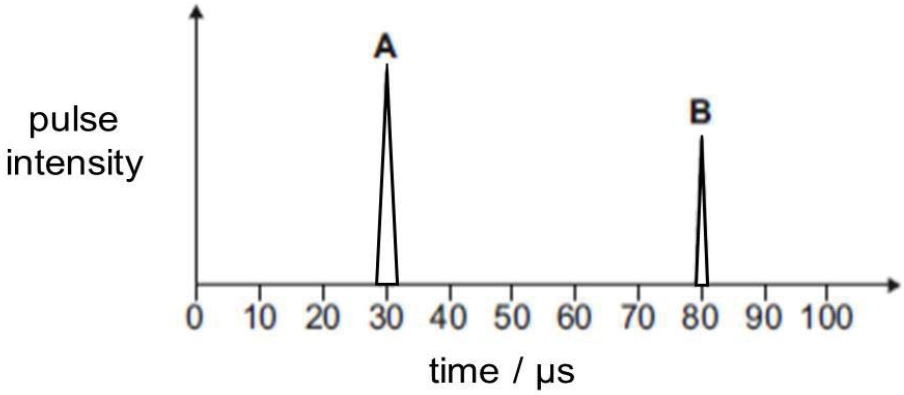

Fig. 12.4

If the average speed of the pulse in the mother's womb is 1600 m/s, determine the distance of the foetus from the ultrasound transmitter.

distance =…… [2]

(d) Fig. 12.5 shows water waves in a ripple tank moving towards and passing through a gap in a barrier. The waves are produced by a plane dipper which moves in and out of the water at a constant pace.

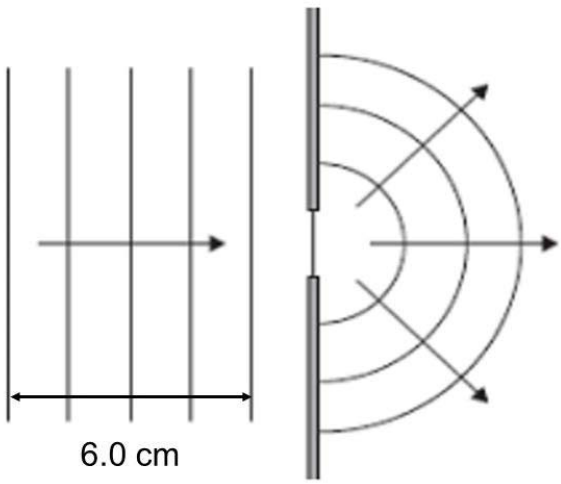

Fig. 12.5

FREE TEST PAPERS - FREETESTPAPER.COM

(i) Explain in terms of wavefronts, how Fig. 12.5 shows that the speed of the wave before passing through the barrier is constant.

……..……

……..……

……..……

...……..……[2]

(ii) 8 waves pass through the gap in the barrier every second.
Determine the speed of the water wave in the ripple tank in m/s.

speed =……. [2]

(iii) When the depth of the water in the ripple tank is increased and the dipper is still moving at the same constant rate, the speed of the water wave increases. Explain why.

……..……

……..……

……..……

...……..……[1]

END OF PAPER

FREE TEST PAPERS - FREETESTPAPER.COM