*Visit*

**FREETESTPAPER.com**

*for more papers*

Website: freetestpaper.com

Facebook.com/freetestpaper

Twitter.com/freetestpaper

**Multiple Choice Questions [40 marks]**
Answer all questions and shade your answers on the OTAS sheet provided

**1** Which of the following are scalar quantities?

(i) pressure
(ii) weight
(iii) temperature

**A** (i) and (ii) only
**B** (i) and (iii) only
**C** (ii) and (iii) only
**D** (i), (ii) and (iii)

**2** P and Q are two different pendulums made of the same material but with different lengths and sizes.

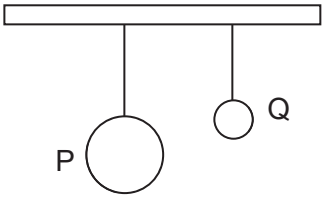


Which of the following is **true**?

| | period | reason |
|---|---|---|
| **A** | $T_P$ is longer than $T_Q$ | length of pendulum P is longer |
| **B** | $T_P$ is longer than $T_Q$ | length of pendulum Q is longer |
| **C** | $T_P$ is shorter than $T_Q$ | P has a bigger mass |
| **D** | $T_P$ is shorter than $T_Q$ | P has a smaller mass |

**3** An object X of mass *m* is released from a height *h*. Above object X, another object Y of mass *4m* is released from a height *4h* simultaneously. If both objects fall freely, which statement is true?

**A** The distance between them decreases and Y overtakes X.
**B** The distance between them remains constant.
**C** The distance between them increases as X falls faster.
**D** The velocities of both objects are constant.


FREE TEST PAPERS - FREETESTPAPER.COM

**4** A police car starts from rest and accelerates quickly to catch up with a speeding motorcycle within *t* minutes. Which graph describes the above scenario?

**A**

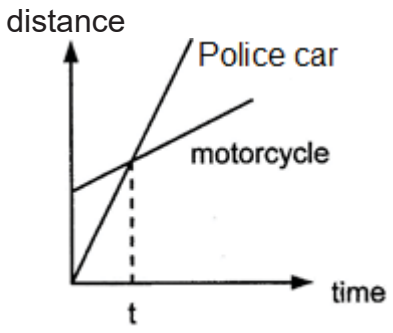


**B**

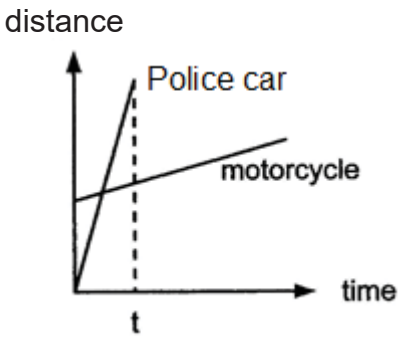


**C**

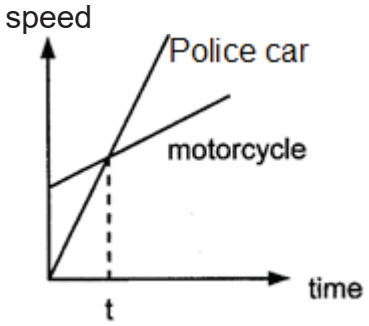


**D**

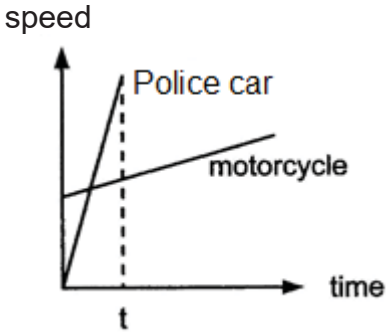


**5** An object of weight *W* is tied to a thread of tension *T* and fixed to a wall. The object is pulled to the right with a force *F* and it remains stationary.

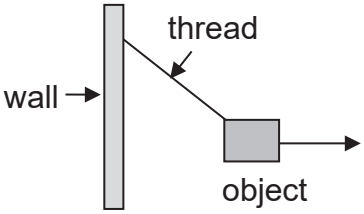


Which one of the following diagrams represents the system shown above?

**A**

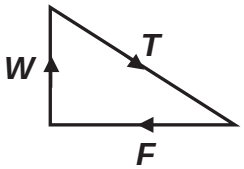


**B**

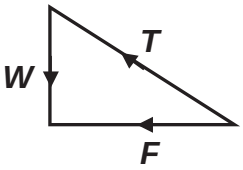


**C**

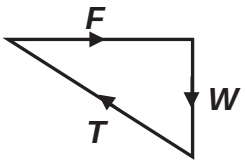


**D**

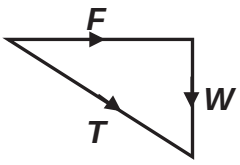



FREE TEST PAPERS - FREETESTPAPER.COM

**6** A wooden box of mass 2.0 kg is pushed horizontally across a table.

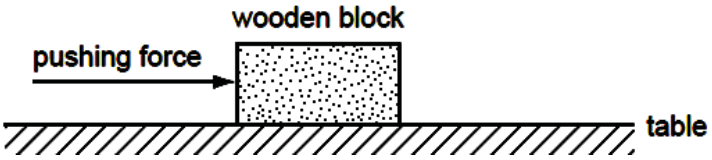


If the acceleration of the block is 0.40 m/s$^2$ and the frictional force acting against the block's motion is 20 N, then the magnitude of the pushing force is _____.

**A** 0.80 N
**B** 19.2 N
**C** 20 N
**D** 20.8 N

**7** An object is falling under gravity with terminal velocity.
Which statement below is correct?

**A** The air resistance acting against the object at this instant is negligible.
**B** The object falls with zero acceleration at this instant.
**C** The object slowed down before it achieves terminal velocity.
**D** No force acts on the object at this instant.

**8** A 50 g container, when fully filled with water of density 1.0 g/cm$^3$ has a total mass of 100 g. When it is fully filled with another liquid P, its total mass is 350 g.
What is the density of liquid P?

**A** 5.0 g/cm$^3$ **B** 6.0 g/cm$^3$
**C** 7.0 g/cm$^3$ **D** 9.0 g/cm$^3$

**9** The arrangement made up of two forks and a horizontal stick is pivoted on the pointed end of an upright stick and is stationary as shown below.

At which points **A, B, C or D** is the centre of gravity of the arrangement?

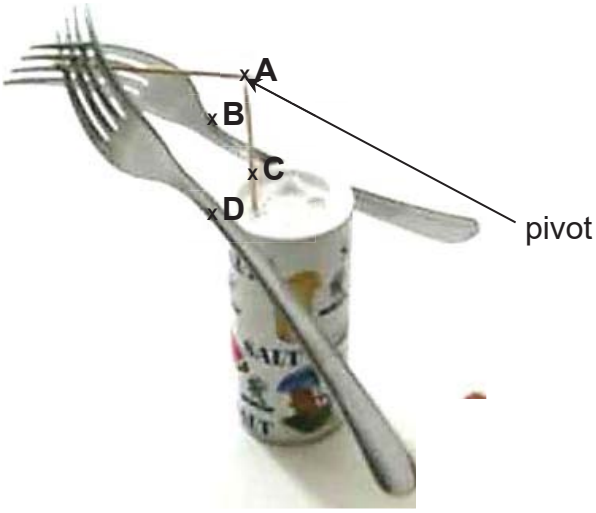



FREE TEST PAPERS - FREETESTPAPER.COM

**10** A uniform bar has mass 50 kg and length 8 m. A man lifts edge Q vertically up with a force F such that the bar pivots at edge P. What is the magnitude of force F to just lift edge Q off the floor?

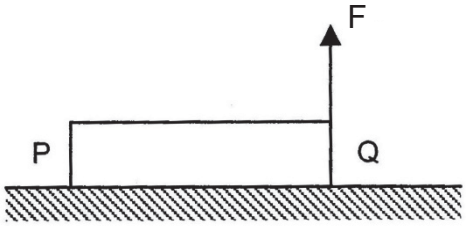


**A** 12.5 N **B** 62.5 N **C** 125 N **D** 250 N

**11** An U-tube contains water of density 1.00 g $cm^{-3}$ and oil. What is the density of the oil?

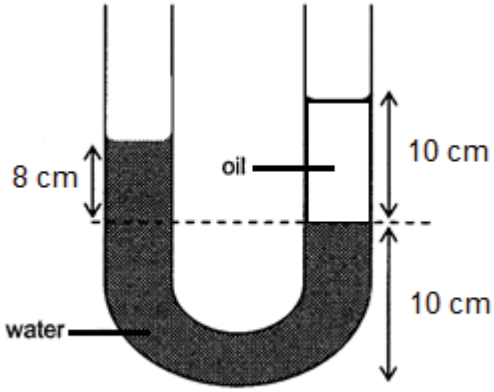


**A** 0.80 g $cm^{-3}$ **B** 0.90 g $cm^{-3}$ **C** 1.11 g $cm^{-3}$ **D** 1.25 g $cm^{-3}$

**12** When a barometer is taken up in a hot air balloon, the mercury height

**A** increases as the atmospheric pressure increases.

**B** increases as the atmospheric pressure decreases.

**C** decreases as the atmospheric pressure increases.

**D** decreases as the atmospheric pressure decreases.

**13** A man of mass 67 kg and a woman of mass 48 kg run up to the same stage via two different flight of steps. If they reach the stage at the same time, which statement is true?

**A** The man runs faster than the woman.

**B** The man uses less power than the woman.

**C** The man gains more gravitational potental energy than the woman.

**D** The man gains less kinetic energy than the woman.


FREE TEST PAPERS - FREETESTPAPER.COM

**14** A car of mass 800 kg brakes and decelerates uniformly from 22.2 $ms^{-1}$ to rest in 12 s. All the kinetic energy of the car is converted to thermal energy (work done against friction). At what rate must the braking surfaces lose thermal energy to keep their temperatures constant?

**A** 16.4 kW **B** 161 kW **C** 198 kW **D** 213 kW

**15** A motor drives a pump that raises 0.20 $m^3$ of water up by 5.0 m in 10 minutes. What is the power generated by the motor? Take density of water to be 1000 kg $m^{-3}$.

**A** 1.67 W **B** 16.7 W **C** 556 W **D** 10000 W

**16** A gas is heated in a rigid sealed container. Which quantity does **not** change?

**A** the average speed of the gas particles

**B** the average force exerted on the walls of the container by the gas particles

**C** the average distance between the gas particles

**D** the frequency of collisions on the walls of the container by the gas particles

**17** The diagram shows a cylinder with trapped air.

The piston is pushed inwards by a force ***F***.

What is the best explanation for the increase in the pressure of the trapped air?

**A** the force of collisions of the air molecules on the walls increases

**B** the frequency of collisions of the air molecules on the walls increases

**C** the speed of the air molecules increases

**D** the density of the air molecules increases


FREE TEST PAPERS - FREETESTPAPER.COM

**18** An uncalibrated thermometer is placed in pure melting ice, unknown liquid and in steam and the corresponding level of mercury is marked and measured as shown.

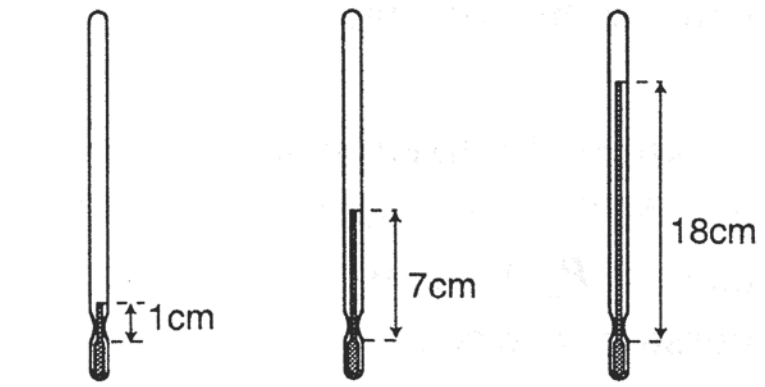


pure melting ice unknown liquid steam

Given that the temperature of pure melting ice and steam is 0.0$^{O}$C and 100.0$^{O}$C respectively, find the temperature of the unknown liquid.

**A** 35.3$^{O}$C **B** 36.8$^{O}$C

**C** 38.9$^{O}$C **D** 41.2$^{O}$C

**19** The intellectual beings in M-universe use a different set of units for measurements.
They measure temperature using the Thor, where the melting and boiling points of water are 25 Thor and 75 Thor respectively.
They measure energy using the Hulk, where one Hulk is the amount of thermal energy needed to increase the temperature of one gram of water by one Thor.

How much energy is required to increase 5 g of water from 30 Thor to 40 Thor?

**A** 1 Hulk **B** 25 Hulk

**C** 50 Hulk **D** 75 Hulk

**20** The latent heat of fusion of a substance is used to

**A** to increase the kinetic energy of the molecules.

**B** to increase the kinetic energy of electrons in the molecules.

**C** to work against the surrounding atmospheric pressure.

**D** to do work to break the binding force between the molecules.

**21** A boy is wrapping a sweet corn in aluminium foil for a barbeque. Which side should be on the outside and why?

**A** The shiny side, as it is a better absorber of thermal radiation.

**B** The shiny side, as it is a better conductor of thermal radiation.

**C** The dull side, as it is a better absorber of thermal radiation.

**D** The dull side, as it is a better emitter of thermal radiation.


FREE TEST PAPERS - FREETESTPAPER.COM

**22** A pebble is dropped into still water so that circular wavefronts are seen to travel outwards with a speed of **v**.

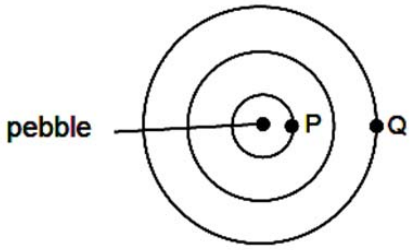


If the wavelength is $\lambda$, what is the time taken for the wave to travel from **P** to **Q**?

**A** $\lambda$ / (2**v**)
**B** $\lambda$ / **v**
**C** 3$\lambda$ / (2**v**)
**D** 2$\lambda$ / **v**

**23** Different types of electromagnetic radiation have different uses.
Which common use of electromagnetic radiation listed below are **incorrect**?

(i) X-rays are used for pre-natal scanning of the foetus
(ii) infra-red radiation are used in sunbeds
(iii) microwaves are used in wireless telecommunication

**A** (i) and (ii) only
**B** (ii) and (iii) only
**C** (i) and (iii) only
**D** (i), (ii) and (iii)

**24** Which is the correct order of decreasing wavelength for these electromagnetic waves?

**A** gamma, ultraviolet, infrared, radio
**B** radio, infrared, ultraviolet, gamma
**C** microwave, radio, ultraviolet, X-ray
**D** infrared, radio, X-ray, gamma

**25** A scout stands in front of a cliff. He claps his hands so that every clap coincides with the echo of his previous clap. He recorded the time interval between 25 successive claps to be 22 s.

If the speed of sound is 340 m/s, what is the distance of the scout from the cliff?

**A** 75 m
**B** 97 m
**C** 150 m
**D** 193 m


FREE TEST PAPERS - FREETESTPAPER.COM

**26** In the diagram below, a rope wave is moving from A to B. P, Q and R are points on the wave.

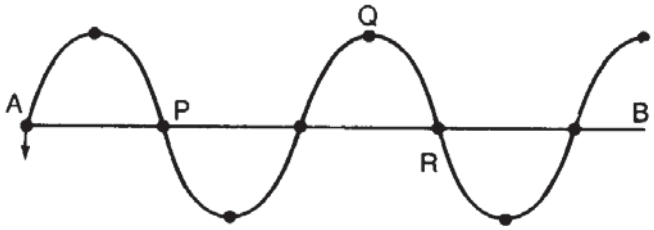


At the particular instance shown, what is the direction of movement of points P, Q and R?

| | P | Q | R |
|---|---|---|---|
| **A** | down | down | down |
| **B** | down | up | up |
| **C** | up | down | up |
| **D** | up | up | up |

**27** Which of the following cannot be considered as an application of ultrasound waves?

**A** medical diagnosis

**B** normal human conversations

**C** detection of fishes in the sea

**D** cleaning of spectacles

**28** The diagrams show oscilloscope traces of sounds picked up by microphones.
The oscilloscope controls are set in the same setting for all the traces.

Which trace shows the sound that is both soft and low-pitched?

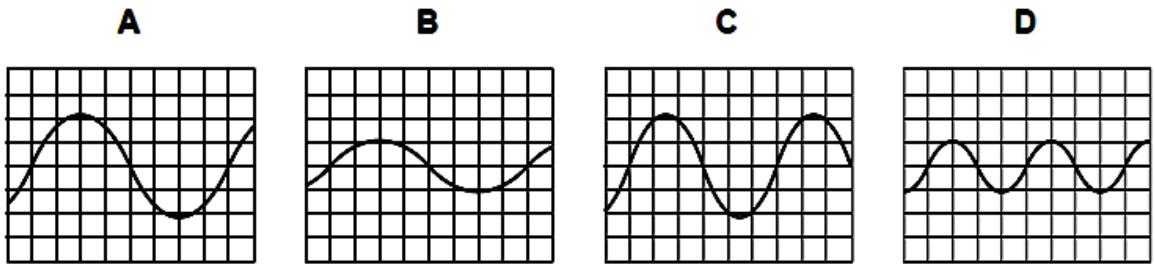



FREE TEST PAPERS - FREETESTPAPER.COM

**29** The diagram shows two parallel rays of light passing through a converging lens. Through which point will the light ray RS pass after passing through the lens?

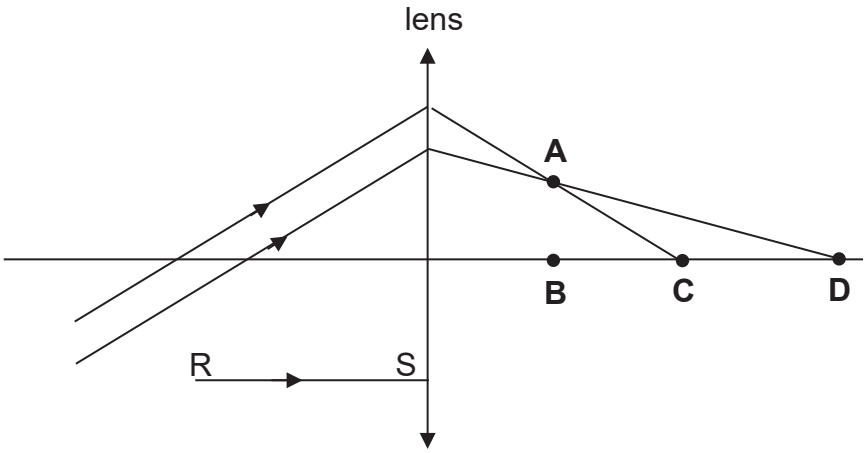


**30** What are the steps to be taken to charge the two metal spheres P and Q negatively?

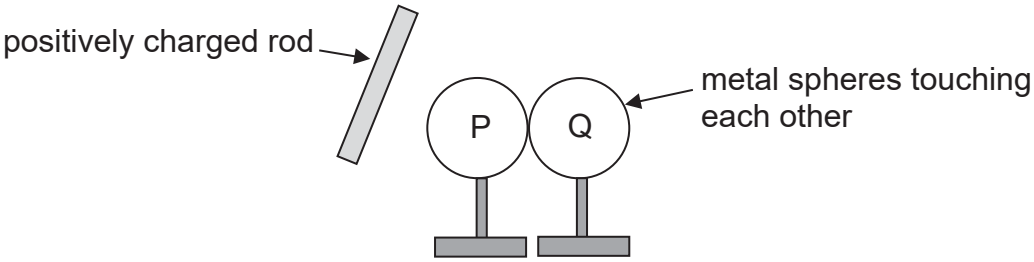


**A** remove the rod first and then earth Q

**B** separate P and Q first and then remove the rod

**C** separate P and Q first, then remove the rod and finally earth Q for a while

**D** earth Q for a while first, then remove the rod and finally separate P and Q

**31** Which object will **not** attract tiny pieces of paper?

**A** a metal knife sharpened with a knife sharpener

**B** a ceramic spoon wiped with a kitchen cloth

**C** a plastic comb combed through dry hair

**D** a wooden pencil rubbed with an eraser

**32** A constant current of 2.0 A flows through an electrical appliance.

If the charge on each electron is $1.6 \times 10^{-19}$ C, how many electrons flow pass the electrical appliance in one hour?

**A** $3.47 \times 10^{15}$

**B** $3.13 \times 10^{18}$

**C** $1.25 \times 10^{19}$

**D** $4.50 \times 10^{22}$


FREE TEST PAPERS - FREETESTPAPER.COM

**33** The diagram shows the current-voltage graphs of four different conductors A, B, C and D. Which conductor has the greatest resistance when the same voltage is applied across each of them?

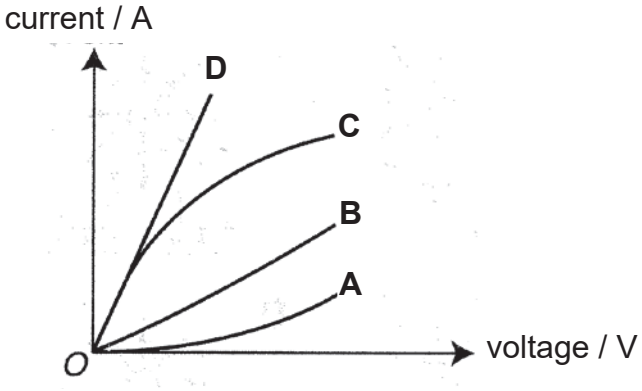


**34** The diagram shows four identical bulbs A, B, C and D connected in a closed circuit. Which bulb will light up the brightest?

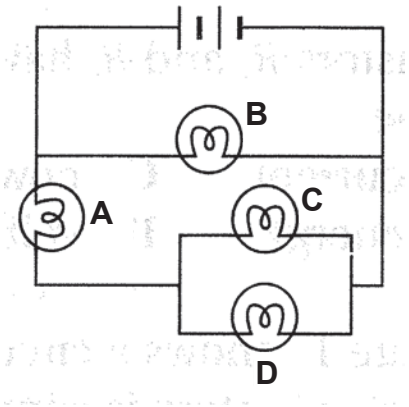


**35** What is the effective resistance between P and Q?

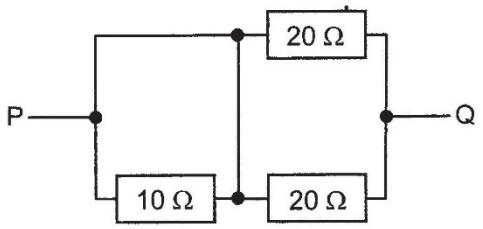


**A** 10 Ω **B** 20 Ω **C** 40 Ω **D** 50 Ω

**36** The Public Utilities Board is charging 15 cents for every 1 kWh of energy consumption.

How much would you have to pay the Public Utilities Board if you used three 40 W lamps and a 120 W television for 5 hours everyday for one week?

**A** $0.18 **B** $1.26 **C** $8.40 **D** $126


FREE TEST PAPERS - FREETESTPAPER.COM

**37** The diagram below illustrates a permanent horseshoe magnet and a keeper.

The keeper, which is easily magnetised, is placed across and in contact with the poles of the magnet when the magnet is not used.

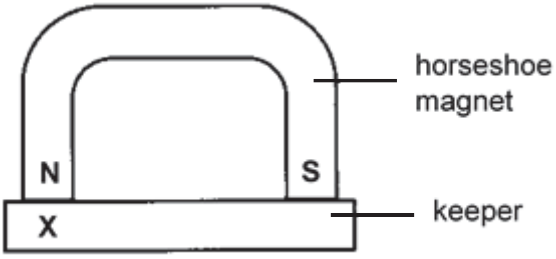


Which of the following correctly gives the material which should be used for the magnet and keeper, and the polarity of end **X** of the keeper when it is placed in position as shown in the diagram above?

| | magnet | keeper | polarity of X |
|---|---|---|---|
| **A** | soft iron | soft iron | south |
| **B** | soft iron | steel | north |
| **C** | steel | soft iron | south |
| **D** | steel | steel | north |

**38** A circular magnetic field centred around ⊗ is superimposed on a uniform magnetic field as shown in diagram below.

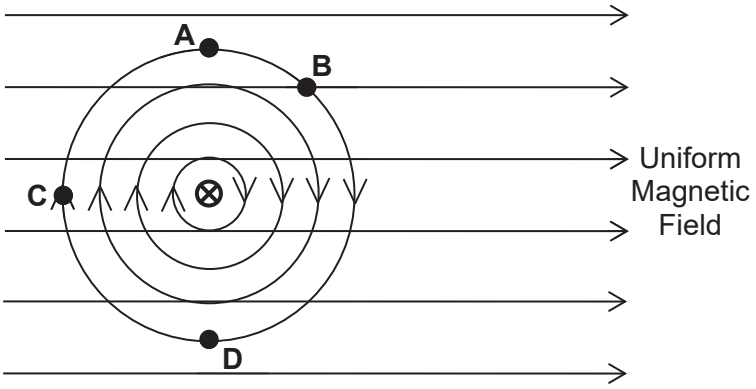


At which point will the magnetic field be the strongest?


FREE TEST PAPERS - FREETESTPAPER.COM

**39** The diagram below shows an iron bar **XY** placed beside a coil of wire wrapped around a paper tube **PQ**.

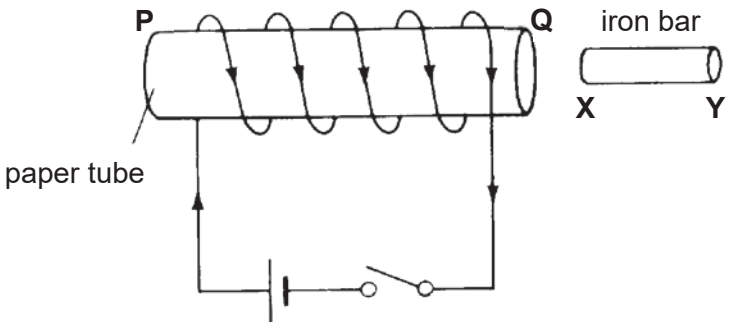


When the switch is closed, which of the following pairs of poles is correct?

| | P | X |
|---|---|---|
| **A** | North | South |
| **B** | South | South |
| **C** | North | North |
| **D** | South | North |

**40** The diagram below shows a slow moving electron travels through a region in between the two poles of a strong bar magnet.

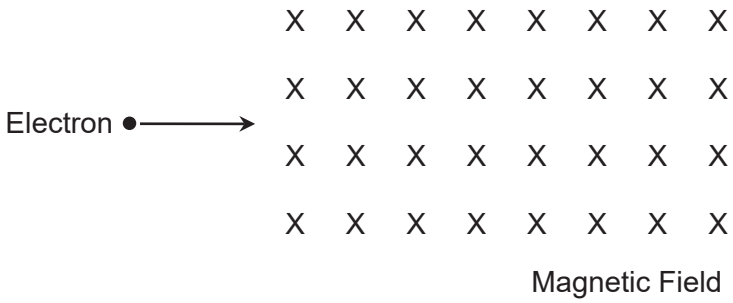


What will happen to the electron?

**A** the electron undergoes no deflection
**B** the electron is deflected upwards in a parabolic path
**C** the electron is deflected downwards in a parabolic path
**D** the electron is deflected out of the paper in a parabolic path

End of Paper 1


FREE TEST PAPERS - FREETESTPAPER.COM

## Section A (50 marks)

Answer **all** the questions.

Write your answers in the spaces provided on the question paper.

**1** The variation with time *t* of the velocity *v* of two cars P and Q is shown in Fig.1.1.
The cars travel in the same direction along a straight road.
Car P passes car Q at time *t* = 0.

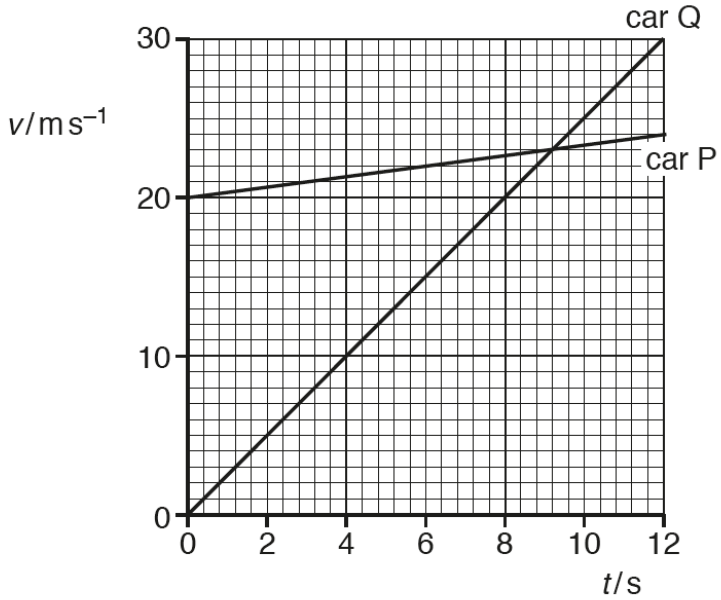


**Fig 1.1**

**(a)** The speed limit for cars on the road is 100 $kmh^{-1}$. State and explain whether car Q exceeds the speed limit from t = 0 s to t = 12 s.

…….....

…….....[1]

**(b)** Calculate the acceleration of car P.

acceleration =…… [2]

**(c)** Determine the distance between the two cars at time *t* = 12 s.

distance =…… [2]


FREE TEST PAPERS - FREETESTPAPER.COM

**(d)** From time t = 12 s, the velocity of each car remains constant at its value at t = 12 s. Determine the time t at which car Q passes car P.

time t =…… [2]

**2** Fig. 2.1 shows a boy on a sledge travelling down a slope.

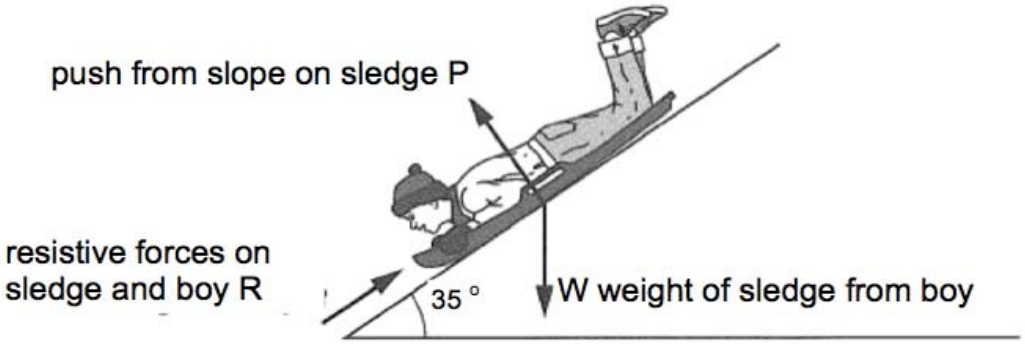


**Fig 2.1**

**(a)** The boy and the sledge have a total mass of 60 kg and are travelling at a constant speed. The angle of the slope to the horizontal is 35° and the resistive forces on the sledge and boy is *R*.

By means of a scaled diagram, determine the magnitude of the resistive force R.

R =…… [3]


FREE TEST PAPERS - FREETESTPAPER.COM

**(b)** Explain why the boy is travelling at constant speed even though he is moving down a slope.

…….....

.

…….....[2]

**3** Fig. 3.1 below shows a uniform beam used as a bridge and supported symmetrically by two rollers. A student of mass 50 kg stands at a distance of 1.0 m from T.

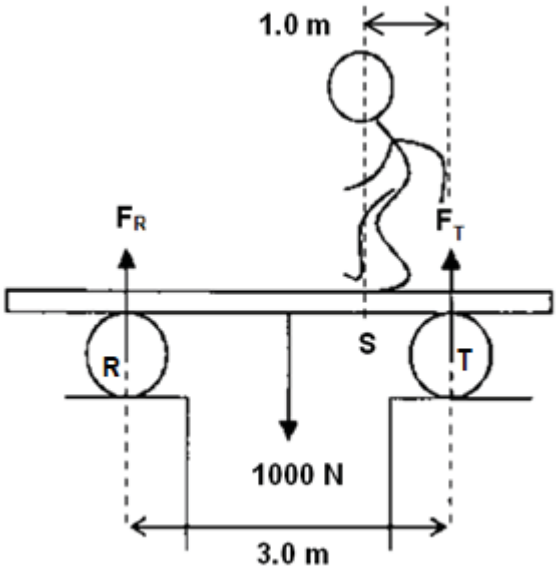


**Fig 3.1**

**(a)** Calculate the reaction force, $F_T$.

$F_T$ =…… [3]

**(b)** Hence, calculate the reaction force $F_R$.

$F_R$ =…… [2]


FREE TEST PAPERS - FREETESTPAPER.COM

**(c)** As the student walks from T to R, the reactions at R and T vary.
In Fig. 3.2 below, sketch and label a graph to show how $F_R$ varies with the position along R to T. Show values on the axes clearly where necessary. [2]

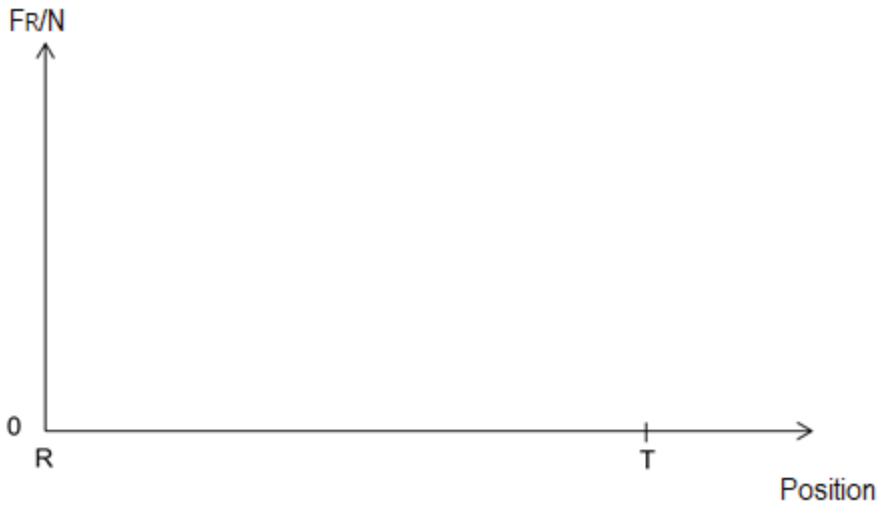


**Fig 3.2**

**4** Fig. 4.1 shows the displacement-distance graph of a transverse wave that travels at a speed of 5.0 m/s. Particle P is a water particle at zero displacement.

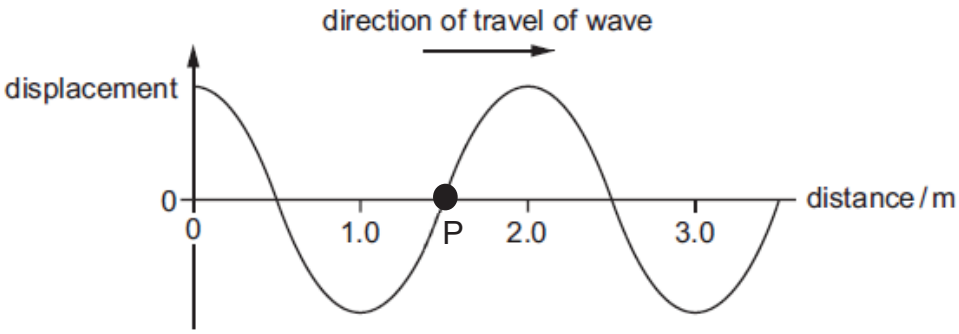


**Fig 4.1**

**(a)** Calculate the period of the wave.

period =…… [2]

**(b)** Hence mark with an "X" in Fig 4.1 the position of particle P 0.1 s later. [2]


FREE TEST PAPERS - FREETESTPAPER.COM

**5** Fig. 5.1 shows a simplified diagram of the essential features of a vehicle's hydraulic braking system.

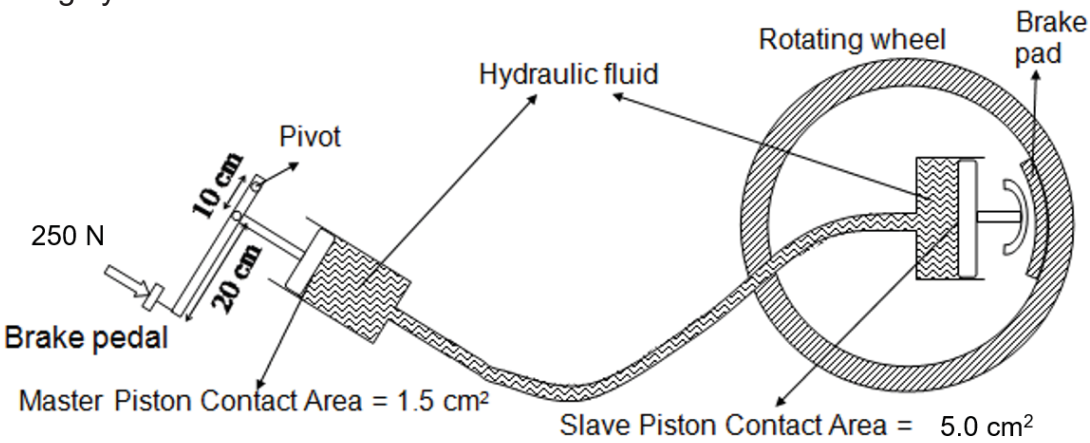


**Fig 5.1**

**(a)** Calculate the force exerted on the master piston when the driver exerts a force of 250 N on the brake pedal.

force =…… [2]

**(b)** Calculate the pressure exerted on the fluid by the master piston.

pressure =…… [2]

**(c)** The hydraulic fluid is effective in transmitting the pressure exerted by the master piston to the slave piston. Calculate the force on the brake pad.

force =…… [2]


FREE TEST PAPERS - FREETESTPAPER.COM

**6** Fig. 6.1 shows a piston in a cylinder that is connected to a manometer.
The atmospheric pressure is 103 kPa.
The density of mercury in the manometer is 13 600 kg/m$^3$.
Take *g* as 10 N/kg.

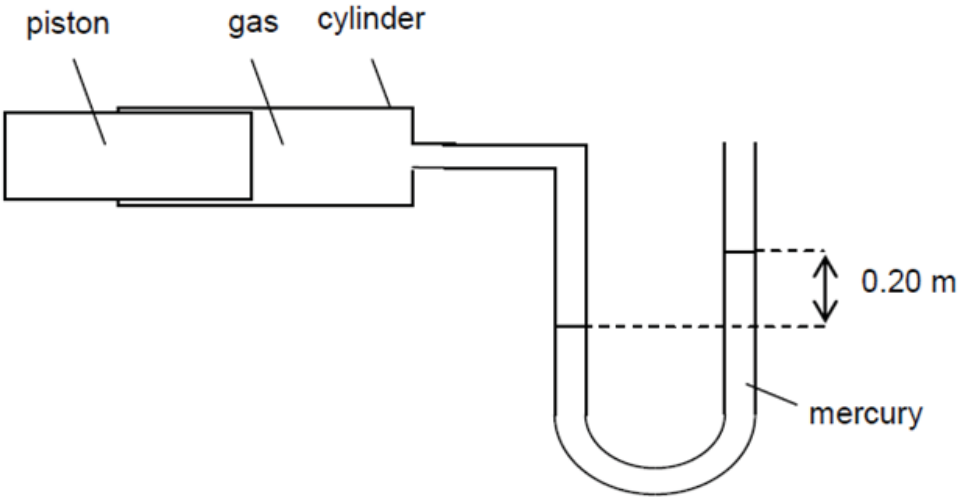


**Fig 6.1**

**(a)** Calculate the pressure of the gas in the cylinder in Pa.

pressure =…… [2]

**(b)** Describe and explain what will happen to the difference in height between the two mercury levels when more mercury is poured into the manometer.

…….....

…….....

……..... [2]

**(c)** To investigate the relationship between the pressure and volume of the gas, the piston is pushed slowly to the right to decrease the volume of the gas.

Explain, in terms of the gas molecules, why the pressure inside the cylinder increases.

…….....

…….....

……..... [3]


FREE TEST PAPERS - FREETESTPAPER.COM

**(d)** The gas in the cylinder is gently heated.

Describe and explain in terms of the gas molecules what happens to the pressure of the gas.

…….....

…….....

……..... [3]

**7** Fig. 7.1 shows a ray of light AB incident on an interface of air and corn oil at an angle, *x*, of 35°. The ray travelled through layers of corn oil and glycerol and is then reflected from the surface of a plane mirror below the glycerol layer. The ray then emerges from the corn oil back into the air at point D. The refractive index of corn oil is 1.47.

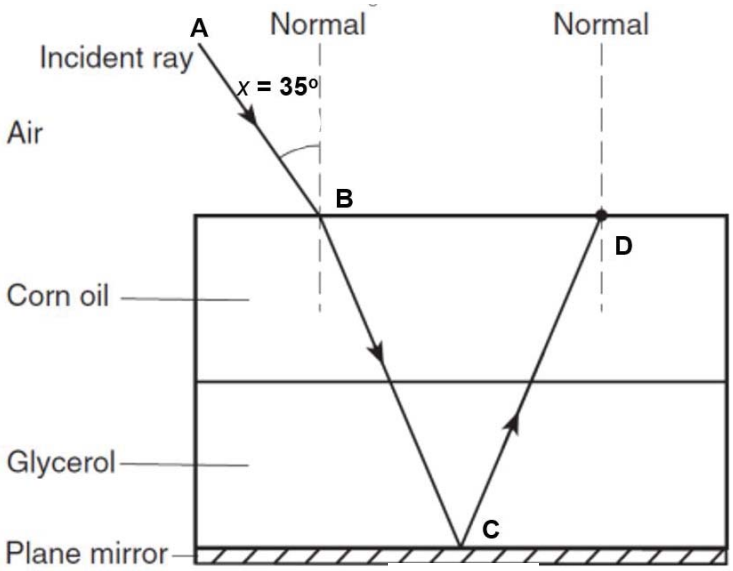


**Fig 7.1**

**(a)** Calculate the angle of refraction of the light ray AB as it enters the corn oil from air.

angle =…… [2]

**(b)** The ray does not bend at the corn oil and glycerol interface. Explain why.

…….....

…….....[1]

**(c)** Complete the ray CD in Fig. 7.1 and label the value of the angle of refraction at D. [1]


FREE TEST PAPERS - FREETESTPAPER.COM

**(d)** State whether the ray, CD, will undergo total internal reflection at point D as the angle *x* is increased. Explain your answer.

…….....

…….....[2]

**8** Fig. 8.1 shows a negatively charged rod suspended by an insulating thread. A neutral metal sphere mounted on an insulating stand is brought close to the charged rod without touching each other.

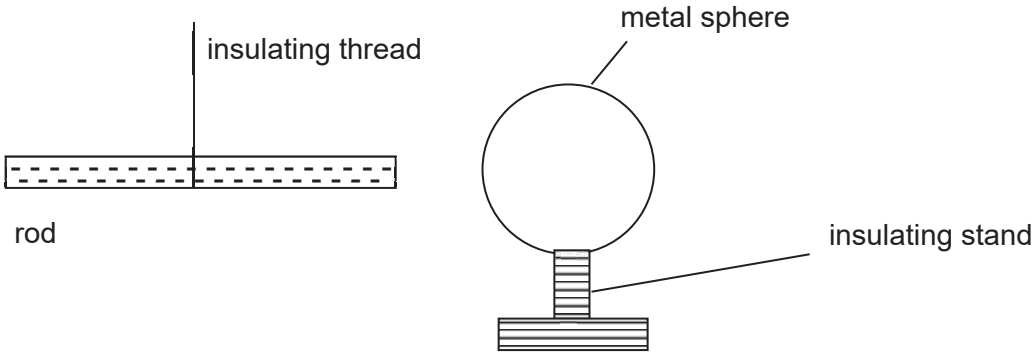


**Fig 8.1**

**(a)** Describe and explain what happens to the charges in the metal sphere.

…….....

…….....

…….....[2]

**(b)** A second identical metal sphere which is neutral is brought close and in contact with the first metal sphere. The second metal sphere is earthed as shown in Fig. 8.2.

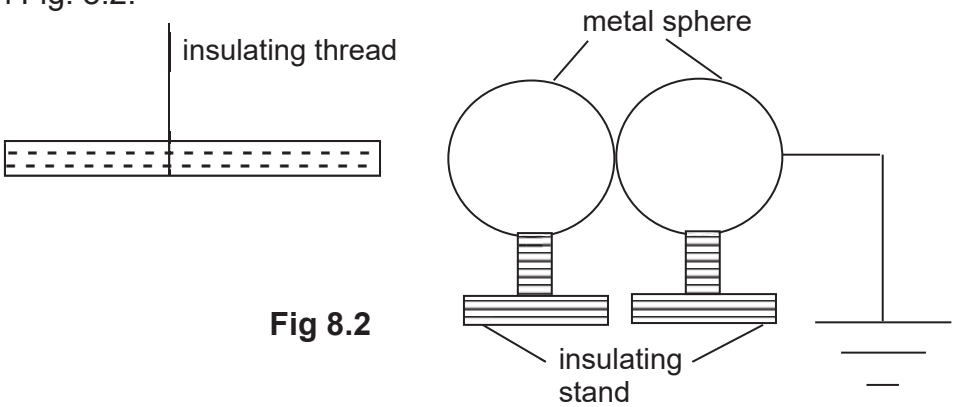


**Fig 8.2**

Draw on Fig. 8.2 the distribution of charges in the metal spheres. Explain your answer.

…….....

…….....

…….....[3]


FREE TEST PAPERS - FREETESTPAPER.COM

## Section B (30 marks)

Answer **all** questions in this section
Answer only one of the two alternative questions in **Question 11**.

**9(a)** Fig. 9.1 shows a full scale diagram of the positions of particles of a medium at a particular instant when a sound wave, travelling from left to right, passes through the medium. Before the wave arrived, the particles were equally spaced at their original undisturbed positions as shown by the vertical lines.

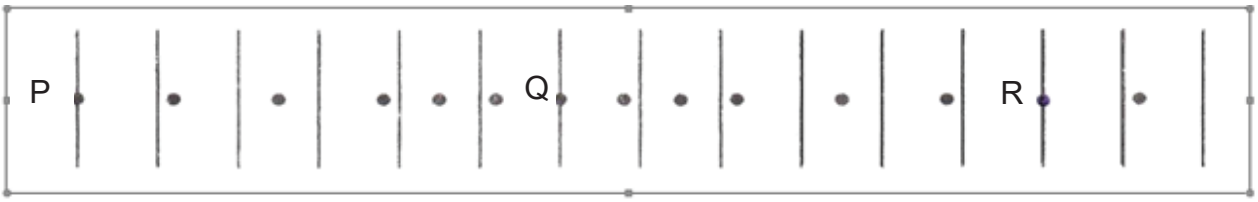


**Fig 9.1**

**(i)** Explain how Fig. 9.1 shows that sound is a longitudinal wave.

…….....

……..... [1]

**(ii)** Given that Fig. 9.1 is drawn to full scale, determine the amplitude and the wavelength of the sound wave.

amplitude =…… [1]

wavelength =…… [1]

**(iii)** Given that the speed of sound in the medium is 1500 m/s, calculate the time taken for the compression at Q to reach position R.

time =…… [2]


FREE TEST PAPERS - FREETESTPAPER.COM

**(b)** Cheng Xi is attending a scouts camp. He suggests three methods to keep their food warm as shown in Fig. 9.2. In method A, the hot food box is kept in a large plastic container. In method B, dry leaves are loosely arranged around. In method C, dry leaves are tightly packed around the food box.

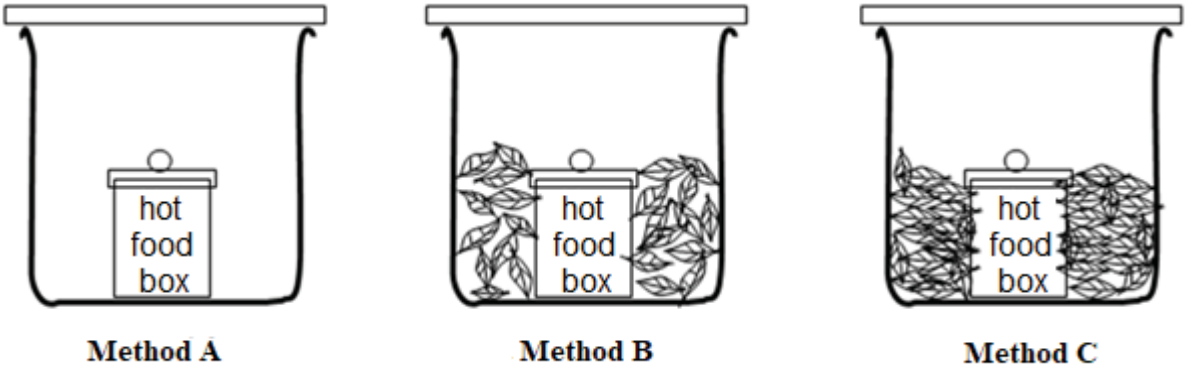


**Fig 9.2**

**(i)** Explain why there is a faster loss of heat in method A compared to method B, although air is a poor conductor of heat.

.....

.....

.....[2]

**(ii)** Comparing methods B and C, state and explain which method is better at minimising heat loss from the food.

.....

.....

.....[2]

**(iii)** Suggest a suitable colour for the plastic container in order for the food to be kept as warm as possible. Explain your choice of colour.

.....

.....[1]


FREE TEST PAPERS - FREETESTPAPER.COM

**10(a)** Redraw Fig. 10.1 in the space below to show clearly which elements are in series and which are in parallel. [2]

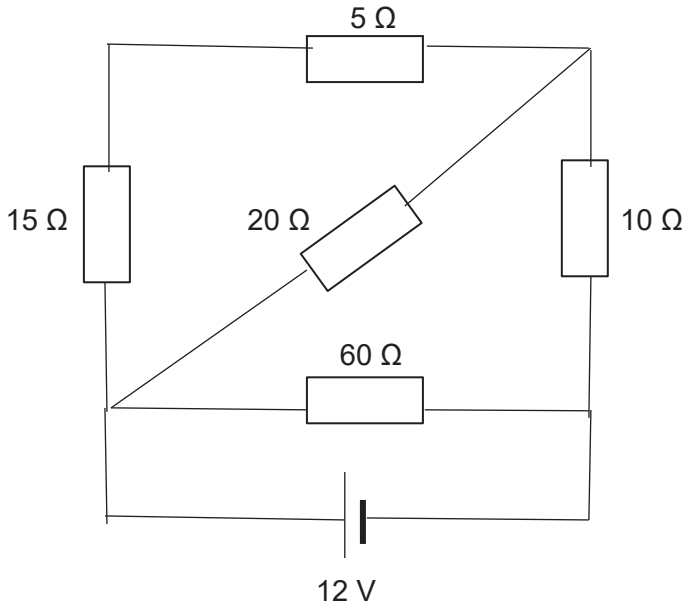


**Fig. 10.1**

**(b)** Calculate the effective resistance of this circuit.

resistance = ……[2]


FREE TEST PAPERS - FREETESTPAPER.COM

**(c)** Calculate the current flowing through the 20 Ω resistor.

current = ……[3]

**(d)** Calculate the current flowing out of the battery.

current = ……[1]

**(e)** Calculate the energy consumed, in kWh, when the circuit is switched on for 12 hours.

energy = ……[2]


FREE TEST PAPERS - FREETESTPAPER.COM

**11 EITHER**

**Fig. 11.1** shows a circuit containing a 12 V battery of negligible internal resistance and four resistors.

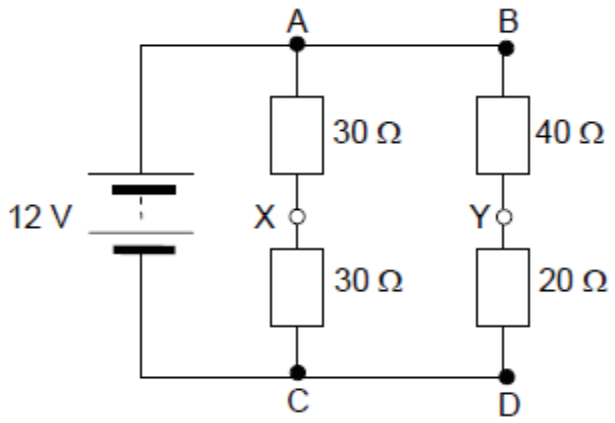


**Fig. 11.1**

**(a)** Calculate the effective resistance in the circuit.

effective resistance = ……[1]

**(b)** Calculate the current supplied by the battery.

current from battery = ……..[1]

**(c)** Determine the reading on a voltmeter of infinite resistance that is connected between X and Y.

voltmeter reading = ……..[3]


FREE TEST PAPERS - FREETESTPAPER.COM

**(d)** **Fig. 11.2** is the ray diagram representing of a setup of an object placed at 18 cm from the lens. ***AB*** is the object, ***L*** is the thin converging lens and ***p***, ***q***, ***r*** are three light rays.

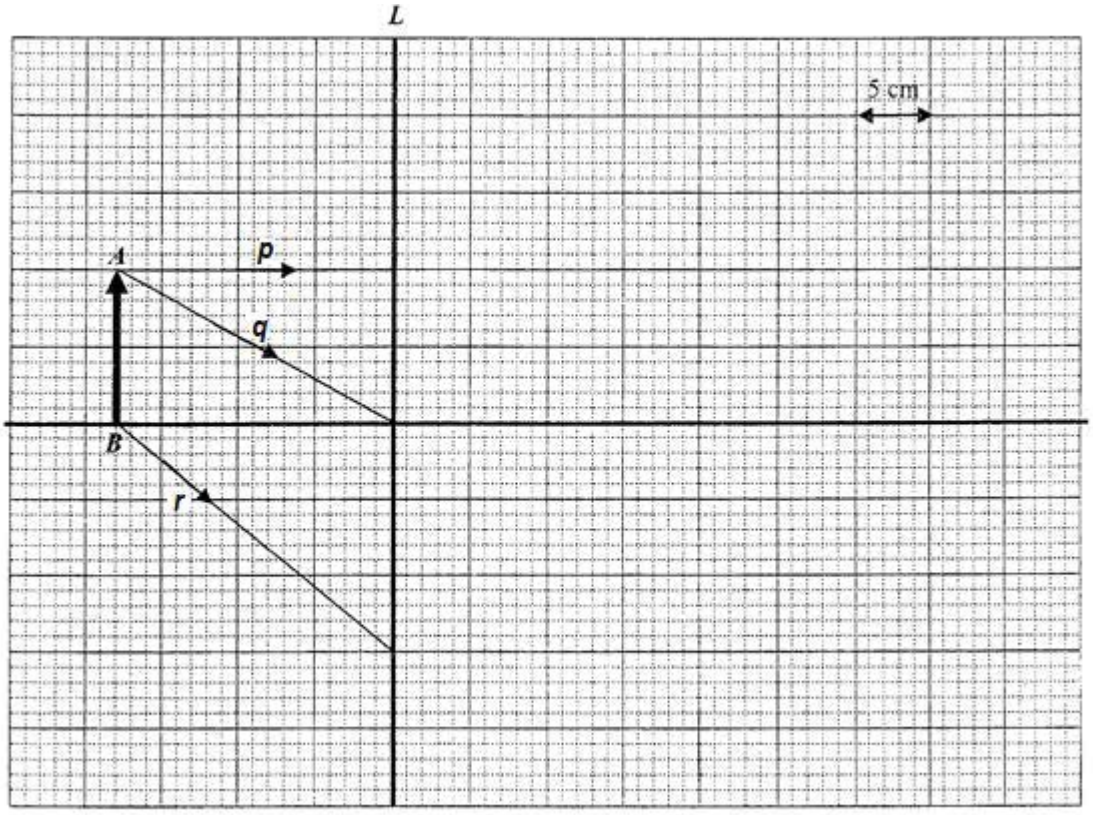


**Fig. 11.2**

**(i)** On **Fig. 11.2**, draw in the image at 36 cm on the right of lens and label it ***A'B'***. Complete the paths of the three light rays, ***p***, ***q***, ***r***. [3]

**(ii)** Hence, state the focal length of the lens.

focal length = ……..[1]

**(iii)** Without moving the lens, state one change to the image as the object is shifted from 18 cm to 16 cm towards the lens.

……..

……[1]


FREE TEST PAPERS - FREETESTPAPER.COM

**OR**

A wire is wound around a soft iron core forming a solenoid as shown in Fig. 11.3. There is a gap in the core. The solenoid is connected in series with a 12 V battery and a variable resistor. The resistance of the solenoid is 0.30 Ω and the variable resistor is set so that it has resistance of 4.5 Ω.

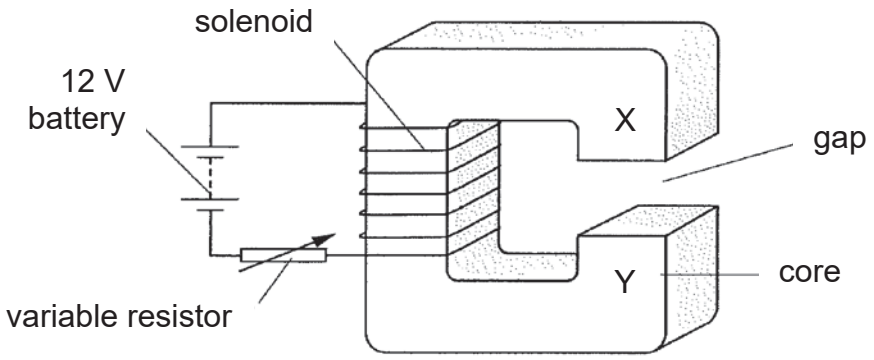


**Fig. 11.3**

**(a)** Calculate the amount of current in the solenoid.

current = .....[2]

**(b)** The current in the solenoid magnetises the soft iron core. Explain two changes that can be made to increase the strength of the magnetic field.

.....

.....

.....[2]

**(c)** Fig. 11.4 shows a horizontal wire PQ in the gap.

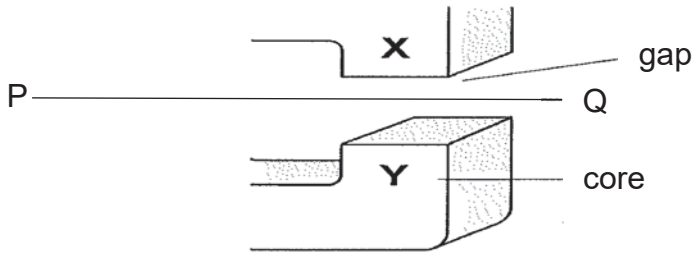


**Fig. 11.4**

**(i)** Determine the polarity at points X and Y of the soft iron core.

X: .....

Y: .....[1]


FREE TEST PAPERS - FREETESTPAPER.COM

**(ii)** A current is made to flow through PQ from left to right. Describe and explain what happens to PQ.

……

……

……

……

……[2]

**(iii)** State and explain the effect on PQ if the 12 V battery is replaced with a 12 V alternating supply source.

……

……

……

……

……[2]

**(iv)** Explain why the core of the electromagnet should not be made of steel.

……

……

……[1]

End of Paper 2


FREE TEST PAPERS - FREETESTPAPER.COM