Visit

FREETESTPAPER.com

for more papers

Website: freetestpaper.com

Facebook.com/freetestpaper

Twitter.com/freetestpaper

Name		Index Number		Class	4 A

DUNMAN HIGH SCHOOL
PRELIMINARY EXAMINATION 2019
GCE O LEVEL PHYSICS

Paper 1 — 6091/1

Paper 1 Multiple Choice

03 September 2019
1 hour

Additional Materials: Multiple Choice Answer Sheet

READ THESE INSTRUCTIONS FIRST

Write your name and index number on all the work you hand in.
Write in soft pencil.
Do not use staples, paper clips, glue or correction fluid.

There are **forty** questions on this paper. Answer **all** questions. For each question there are four possible answers, **A**, **B**, **C** and **D**.
Choose the **one** that you consider correct and record your choice in **soft pencil** on the separate Answer Sheet.

Each correct answer will score one mark. A mark will not be deducted for a wrong answer.
Any rough working should be done in this booklet.
The use of an approved scientific calculator is expected, where appropriate.

For teacher's use:

Paper 1	**/40**
Paper 2	**/80**
Total	**/120**

This document consists of **13** printed pages.

FREE TEST PAPERS - FREETESTPAPER.COM

1 A car travels at a speed of 65 km/h.

What is the speed of the car in m/s?

A 18.1 m/s **B** 55.4 m/s **C** 181 m/s **D** 1080 m/s

2 A light ray is reflected off two mirrored surfaces.

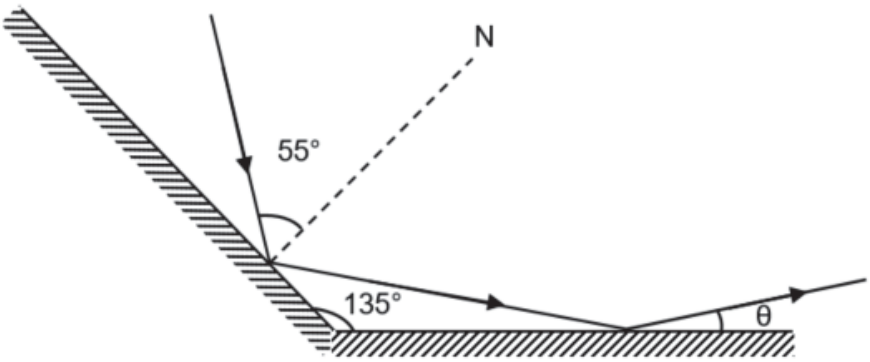

(not to scale)

What is the value of θ?

A 5° **B** 10° **C** 15° **D** 20°

3 A name tag reads “SAM”.

What is the image of the name tag in a plane mirror?

A

B

C

D

4 The refractive index for germanium is 4.01.

What is the speed of light in germanium?

A 7.5×10^7 m/s **B** 7.5×10^8 m/s **C** 1.2×10^8 m/s **D** 1.2×10^9 m/s

FREE TEST PAPERS - FREETESTPAPER.COM

5 A thin, converging lens of focal length *f*, is used to produce various types of images.

Which row is correct?

	location of object	type of image produced
A	less than *f*	inverted, virtual, diminished
B	between f and 2*f*	upright, real, enlarged
C	at *2f*	inverted, real, same size
D	beyond 2*f*	upright, real, diminished

6 A rope is fixed to a wall at one end with the other end moved up and down to produce a wave.

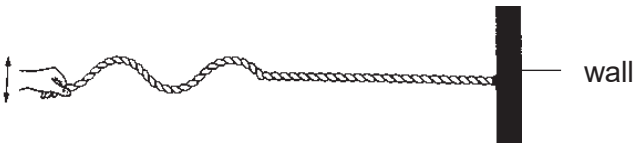

What is transferred along the rope due to this motion?

A mass
B energy
C frequency
D molecules

7 Which is not an application of microwaves?

A To detect structural flaws.
B To ionise biological molecules.
C To cook food in microwave ovens.
D To transmit communication signals.

8 The wavelength of an X-ray is 1.0 nm while the wavelength of a radio wave is 1.0 mm.

What is the ratio of the frequency of the X-ray to the frequency of radio wave?

A 1 : 1 00 000
B 1 : 1 000 000
C 1 00 000 : 1
D 1 000 000 : 1

9 A sound travels through a solid copper tube and then enters air.

Which of the following correctly compares the sound in the solid copper tube to air?

	frequency	speed (in copper tube)
A	different	higher
B	different	same
C	same	higher
D	same	lower

FREE TEST PAPERS - FREETESTPAPER.COM

10 A series of compressions and rarefactions of a sound wave are shown.

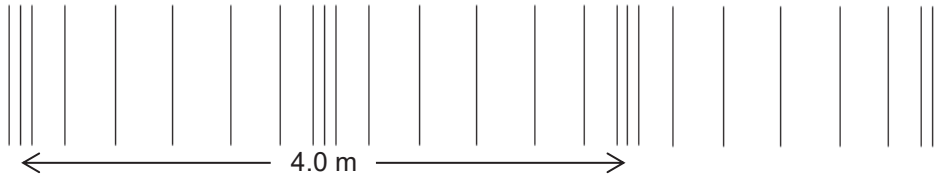

What is the wavelength of the sound wave?

A 2.0 m **B** 3.0 m **C** 4.0 m **D** 6.0 m

11 Which defines acceleration?

A $\frac{change\ in\ distance}{time\ taken}$

B $\frac{change\ in\ distance\ in\ a\ fixed\ direction}{time\ taken}$

C $\frac{change\ in\ speed}{time\ taken}$

D $\frac{change\ in\ velocity}{time\ taken}$

12 A stone falls freely from rest from the top of a building of height, 80 m.

The gravitational field strength *g* is 10 N/kg.

What is the speed of the stone when it hits the ground?

A 4.0 m/s **B** 8.0 m/s **C** 40 m/s **D** 80 m/s

13 Which quantity is a scalar?

A displacement **B** force **C** weight **D** work done

FREE TEST PAPERS - FREETESTPAPER.COM

14 A body is acted on by two forces, *S* and *T*. A frictional force, *F* keeps the body in equilibrium.

Which vector diagram shows the relationship between these forces?

A

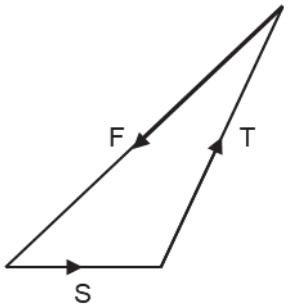

B

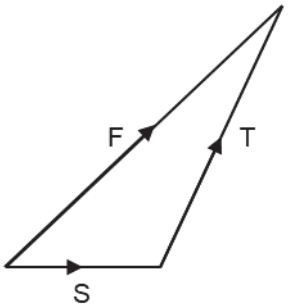

C

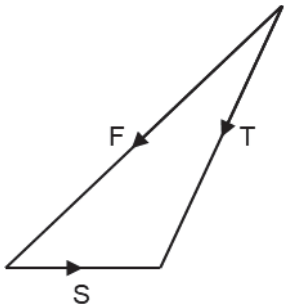

D

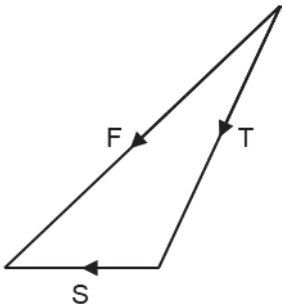

15 A helicopter of mass 3.0×10^3 kg rises vertically with a constant speed of 25 m/s.

The gravitational field strength *g* is 10 N/kg.

What is the resultant force acting on the helicopter?

A 0 N
B 3.0×10^4 N downwards
C 4.5×10^4 N upwards
D 7.5×10^4 N upwards

16 A parachutist is falling through air with terminal velocity.

Which quantity is changing?

A acceleration
B gravitational potential energy
C kinetic energy
D mass

17 Which object has the largest inertia?

A a 1.5×10^{-1} kg baseball pitched at 170 km/h
B a 1.2×10^3 kg sports car travelling at 100 km/h
C a 5.0×10^3 kg stationary helicopter
D a 3.0×10^6 kg falling tree

FREE TEST PAPERS - FREETESTPAPER.COM

18 The mass and volume of different sized samples of a newly discovered metal are measured.

Which graph shows how the mass varies with volume?

A

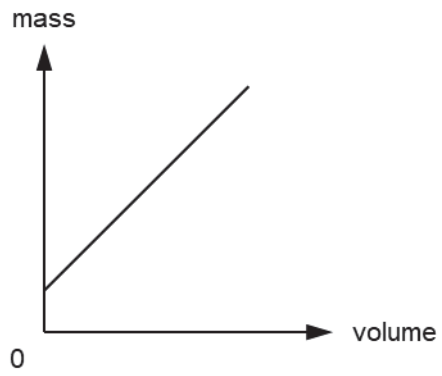

B

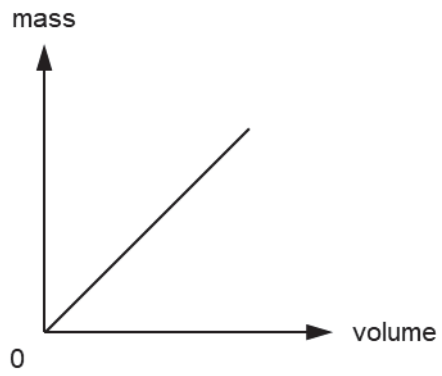

C

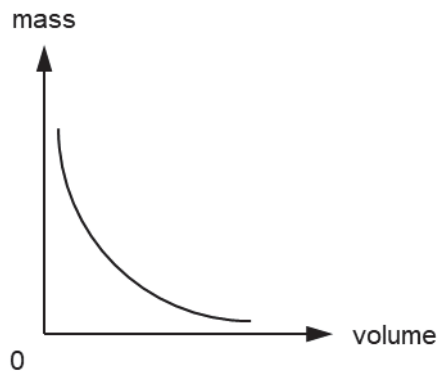

D

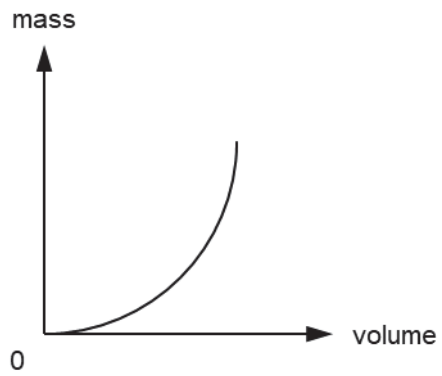

19 A uniform beam has a weight of 60 N and a length of 2.0 m. It is pivoted at a length of 0.60 m from the end X.

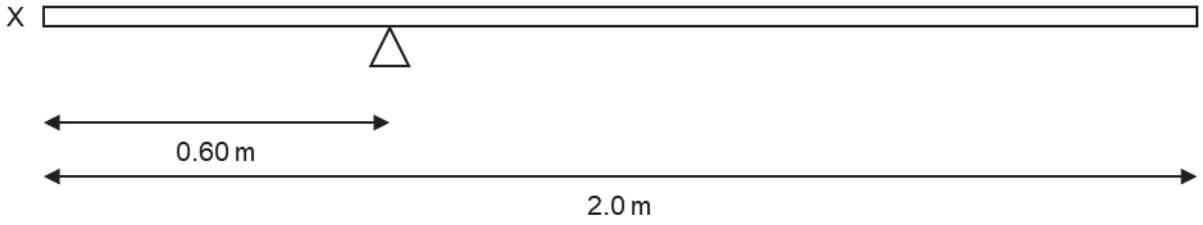

At what distance from the pivot should a 160 N weight be placed in order to balance the beam?

A 0.150 m **B** 0.225 m **C** 0.375 m **D** 0.450 m

FREE TEST PAPERS - FREETESTPAPER.COM

20 A student of weight 500 N runs up a slope of length 30 m and height 15 m in 25 s.

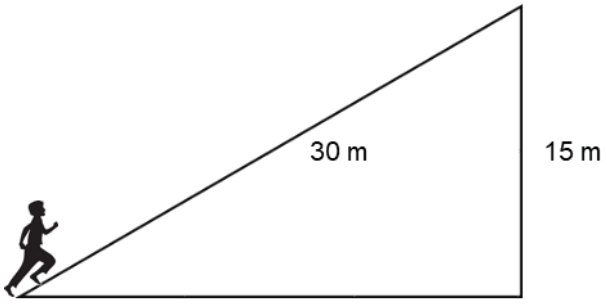

What is the power developed by the student?

A 30 W **B** 60 W **C** 300 W **D** 600 W

21 The two cubes shown below are made from the same material. The bigger cube has sides that are twice as long as the smaller cube. Standing on one face, the small cube exerts a pressure, *P* on the floor.

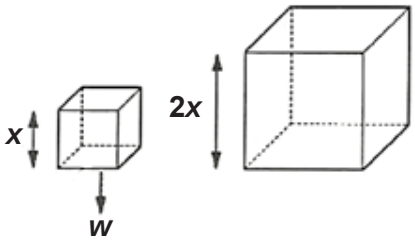

Given that the smaller cube has a weight, *w* and the bigger cube weighs eight times as much, what is the pressure exerted by the larger cube standing on one of its faces?

A ½ P **B** P **C** 2P **D** 4P

22 Equal masses of water are poured into four jars as shown.

Which jar has the least pressure exerted by the water on the base?

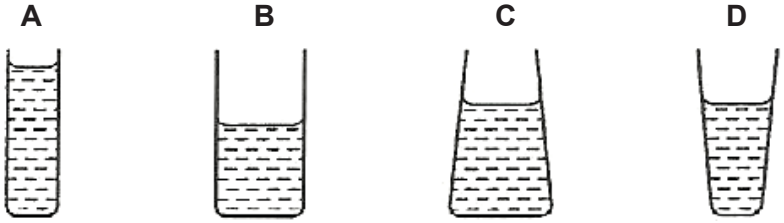

23 When fine pollen grains suspended in water are viewed under a microscope, they are seen to be making small, erratic movements.

Why is this?

A There are convection currents in the water.
B They are being hit by water molecules.
C They are moving and colliding with one another.
D They are living organisms so they move around.

FREE TEST PAPERS - FREETESTPAPER.COM

24 Which physical property is not suitable for defining temperature scales?

A e.m.f at the junction of two different metals
B mass of a solid object
C volume of a liquid column
D volume of trapped gas

25 A piece of wire has an electrical resistance of 980 Ω in ice of -10 °C, and 1750 Ω in boiling water at 100 °C.

What is the resistance of the piece of wire at 30 °C, assuming resistance changes uniformly with temperature?

A 280 Ω **B** 1190 Ω **C** 1260 Ω **D** 1370 Ω

26 A slice of bread is placed under a hot electric grill.

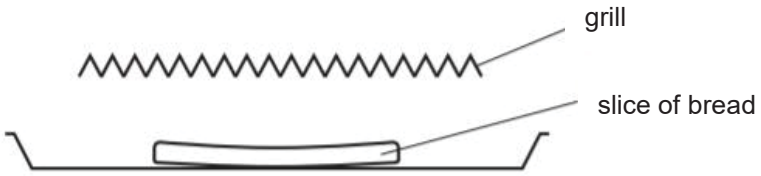

How does thermal energy reach the bread?

A conduction only
B radiation only
C conduction and convection
D convection and radiation

27 Two identical blocks of metal are heated to 20°C and 80°C and placed in a vacuum. In which scenario will thermal equilibrium between the two blocks be reached in the shortest time?

A

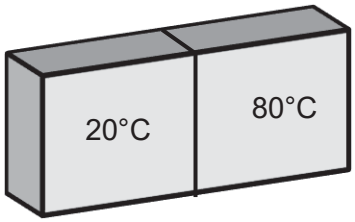

B

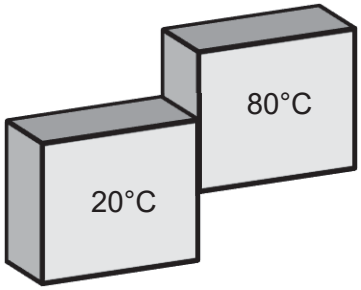

C

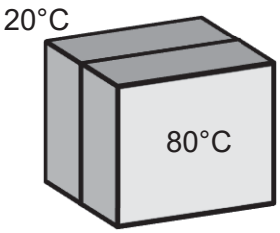

D

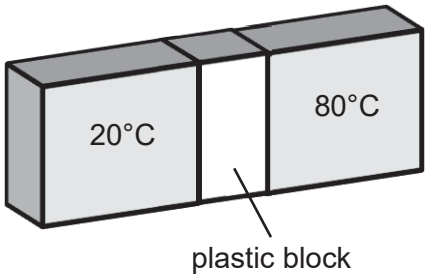

FREE TEST PAPERS - FREETESTPAPER.COM

28 A piece of pure ice melts.

Which row describes the energy changes of the ice as it melts?

	internal potential energy	internal kinetic energy
A	increases	decreases
B	decreases	increases
C	increases	remains constant
D	remains constant	increases

29 A negatively charged rod is brought close to an isolated T-shaped piece of metal.

Initially, the metal is uncharged.

Which diagram shows the induced charge on the metal?

A

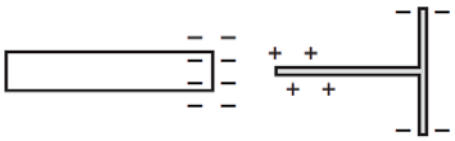

B

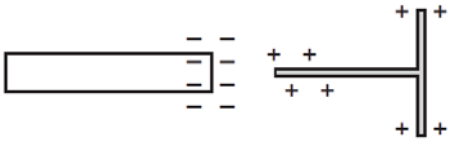

C

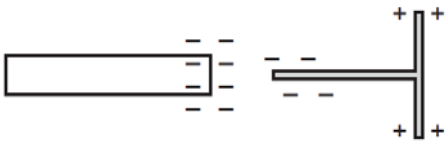

D

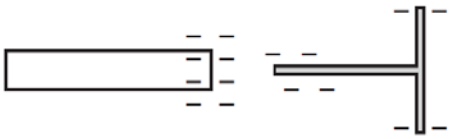

30 The diagram shows the electric field pattern between two isolated point charges.

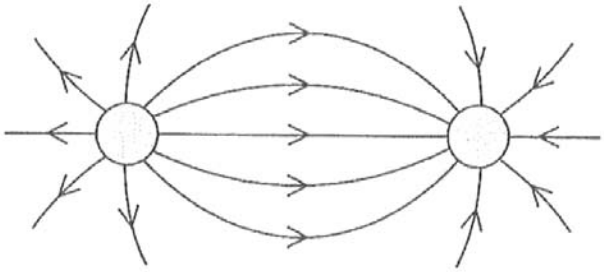

Which two point charges produce this pattern?

A

B

C

D

FREE TEST PAPERS - FREETESTPAPER.COM

31 Identify the correct position of the switches such that all three bulbs are lit.

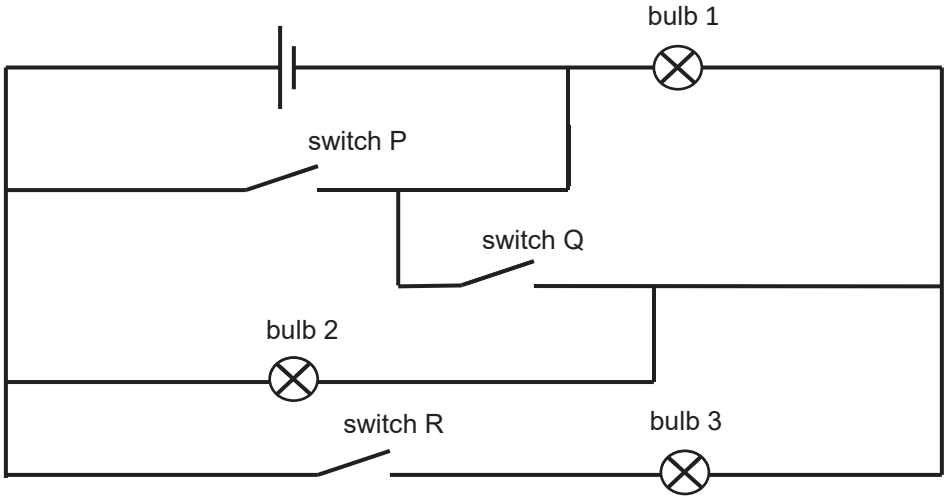

	switch P	switch Q	switch R
A	closed	closed	open
B	open	open	closed
C	open	closed	open
D	open	closed	closed

32 In the diagram below, the potential difference across the battery is denoted by V_ε and the potential difference across R_2 is denoted as V_{out}.

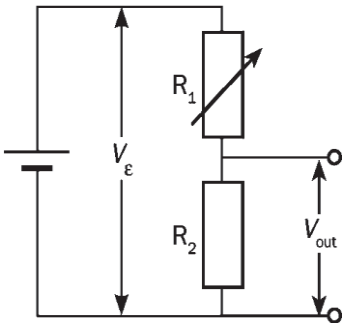

What is the ratio of $V_\varepsilon : V_{out}$?

A $R_1 : R_2$
B $R_2 : (R_1 + R_2)$
C $(R_1 + R_2) : R_1$
D $(R_1 + R_2) : R_2$

FREE TEST PAPERS - FREETESTPAPER.COM

33 Which graph shows the characteristics of a light dependent resistor?

A

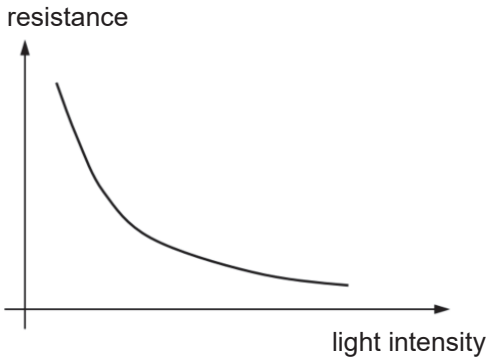

B

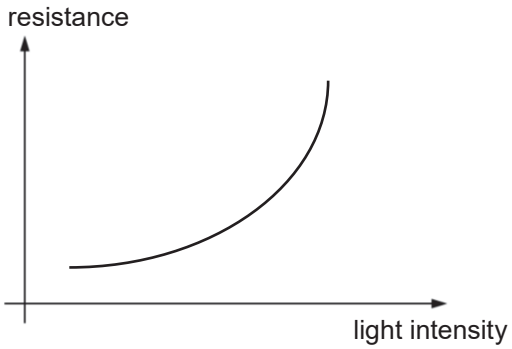

C

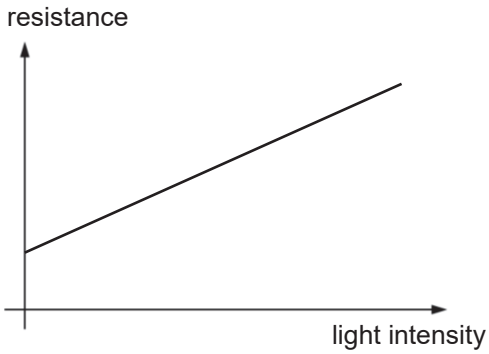

D

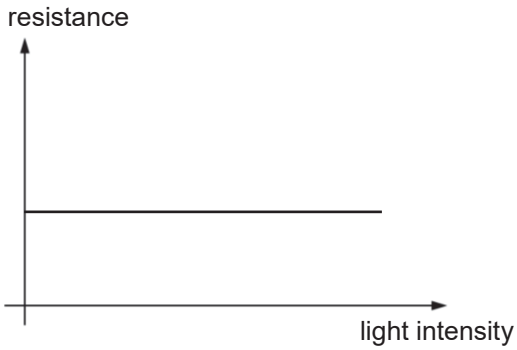

34 Which of the following is not a safety feature found in a typical household electrical circuit?

A fuse
B earth wires
C lightning rod
D main circuit breaker

35 An electric oven is rated at 10 A.

What is a suitable fuse for the oven?

A 5.0 A **B** 8.0 A **C** 10 A **D** 13 A

36 To determine whether a material is magnetic, you should find out if it

A is a metal or a non-metal.
B is a conductor or an insulator.
C can be given an electric charge.
D affects the direction in which a compass needle points.

FREE TEST PAPERS - FREETESTPAPER.COM

37 The diagram shows an alarm system in which the switch S is shown closed.

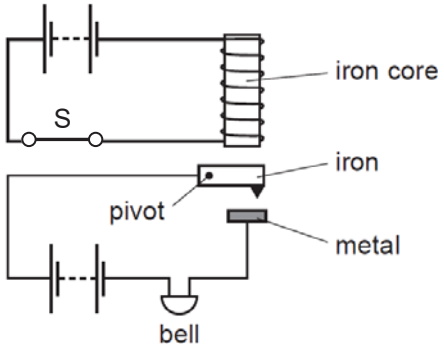

What happens when the switch S is opened?

	iron	bell
A	drops	rings
B	drops	stops ringing
C	moves up	rings
D	moves up	stops ringing

38 Two parallel vertical wires P and Q are a small distance apart in air. There is a downwards electric current in both wires. A force acts on Q due to the current in P. This force is perpendicular to the wire Q.

What is the direction of the force on Q?

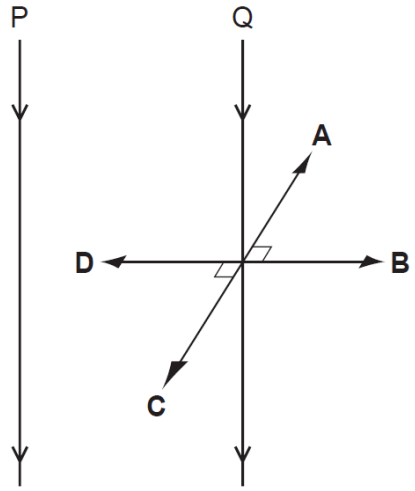

FREE TEST PAPERS - FREETESTPAPER.COM

39 The diagram shows a single-coil electric motor.

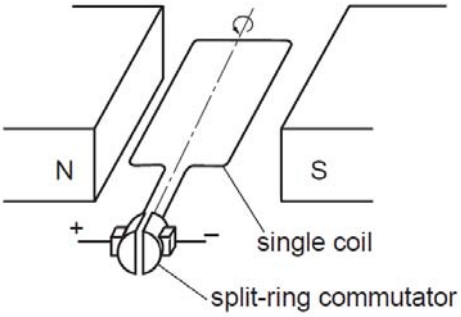

The split-ring commutator reverses the current in the coil as it rotates.

How many times is the current reversed if the coil is rotated for one complete revolution?

A 1 **B** 2 **C** 3 **D** 4

40 Electric power cables transmit electrical energy over large distances using a high voltage, alternating current.

What are the advantages of using a high voltage and of using an alternating current?

	advantage of using a high voltage	advantage of using an alternating current
A	a higher current is produced in the cable	the resistance of the cable is reduced
B	a higher current is produced in the cable	the voltage can be changed using a transformer
C	less energy is wasted in the cable	the resistance of the cable is reduced
D	less energy is wasted in the cable	the voltage can be changed using a transformer

END OF PAPER

FREE TEST PAPERS - FREETESTPAPER.COM

Name		Index Number		Class	4 A

DUNMAN HIGH SCHOOL
PRELIMINARY EXAMINATION 2019
GCE O LEVEL PHYSICS

Paper 2 — 6091/2

Theory

30 Aug 2019
1 hour 45 minutes

Candidates answer on the Question Paper.
No Additional Materials are required.

READ THESE INSTRUCTIONS FIRST

Write your name and index number on all the work you hand in.
Write in dark blue or black pen.
You may use an HB pencil for any diagrams or graphs.
Do not use staples, paper clips, glue or correction fluid.

Section A
Answer **all** questions.

Section B
Answer **all** questions. Question 17 has a choice of parts to answer.

Candidates are reminded that **all** quantitative answers should include appropriate units.
The use of an approved scientific calculator is expected, where appropriate.
Candidates are advised to show all their working in a clear and orderly manner, as more marks are awarded for sound use of Physics than for correct answers.

At the end of the examination, fasten all your work securely together.
The number of marks is given in brackets [ ] at the end of each question or part question.

For teacher's use:

Section A	**/50**
Section B	**/30**
Total	**/80**

This document consists of **24** printed pages and **1** blank page.

FREE TEST PAPERS - FREETESTPAPER.COM

Section A

Answer **all** the questions in this section.

1 A student measures the diameter of a rod using a micrometer.

Fig. 1.1 shows the reading on the micrometer. Given that the micrometer has a zero error of -0.04 mm, determine the actual diameter of the rod.

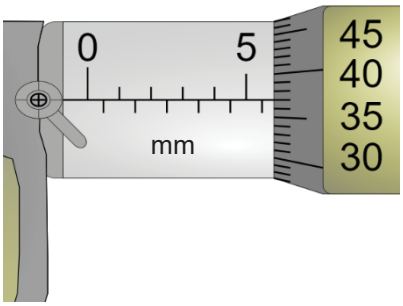

Fig. 1.1

diameter = ... [2]

2 The critical angle of glass is 41.2°.

(a) Calculate the refractive index, η of glass.

η = ... [1]

(b) Fig. 2.1 shows a light ray incident on a glass block. Calculate *r*, the angle of refraction.

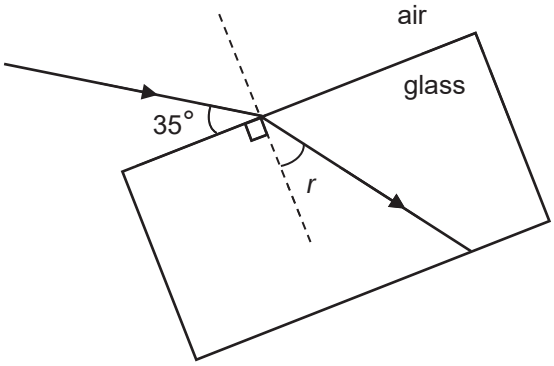

Fig. 2.1 (not to scale)

r = ... [2]

FREE TEST PAPERS - FREETESTPAPER.COM

3 Fig. 3.1 shows a thin converging lens that is used as a magnifying glass.

(a) On Fig. 3.1, draw two rays from the top of the object to locate the top of the image. Draw in the whole of the image. [3]

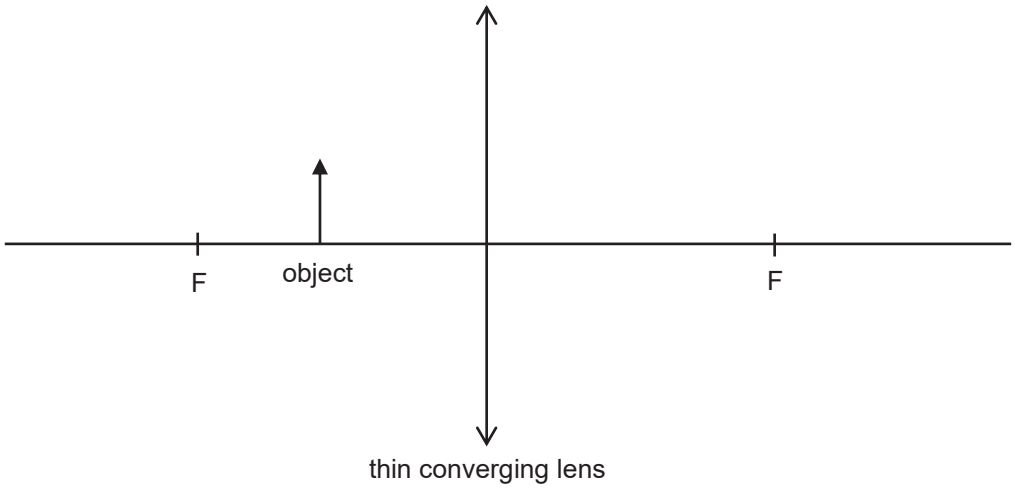

Fig. 3.1

(b) Other than the size of the image relative to the object, state another characteristic of the image.

…….... [1]

FREE TEST PAPERS - FREETESTPAPER.COM

4 Fig. 4.1 shows the displacement-distance graph of a transverse wave.

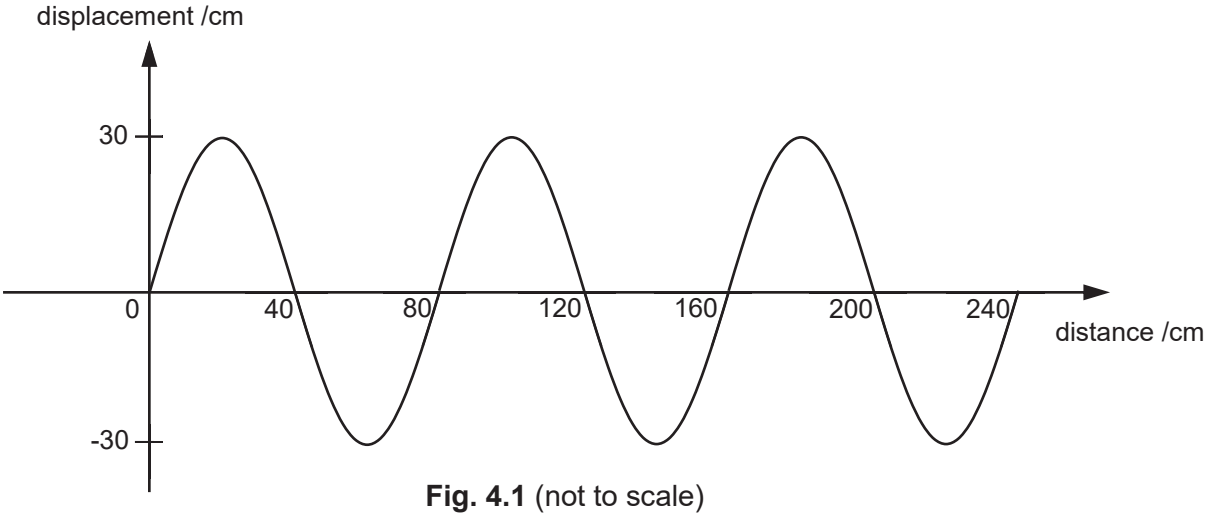

Fig. 4.1 (not to scale)

(a) Determine the amplitude of the wave.

amplitude = …… [1]

(b) The wave propagates at a speed of 2.8 m/s.

Calculate the frequency of the wave.

frequency = …… [2]

(c) Name a region of the electromagnetic spectrum that has a higher frequency than ultraviolet radiation.

…….. [1]

FREE TEST PAPERS - FREETESTPAPER.COM

5 Fig. 5.1 shows a sound source integrated with a microphone placed in the middle of a rectangular room. The microphone is attached to an oscilloscope. A sound pulse is emitted and the oscilloscope starts recording immediately after the entire pulse has been emitted.

Fig. 5.2 shows the oscilloscope trace of the first two returning echoes.

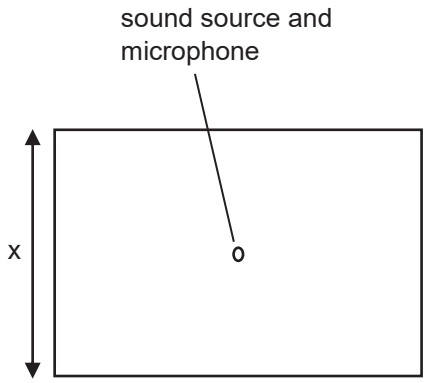

Fig. 5.1 (not to scale)

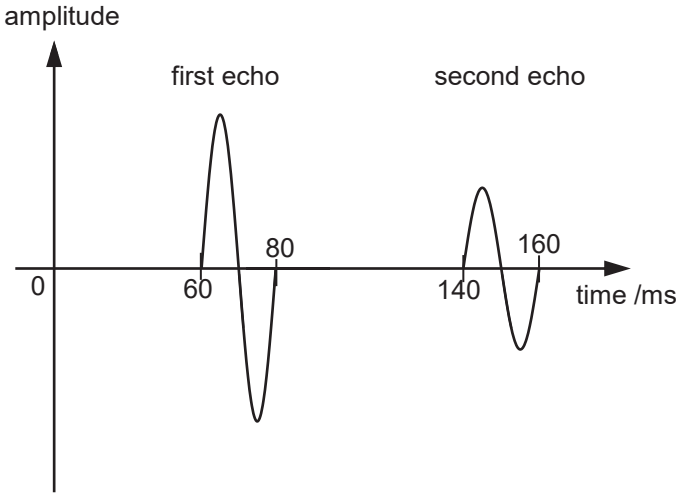

Fig. 5.2 (not to scale)

(a) Explain why the second echo is of a smaller amplitude than the first echo.

……

…… [1]

(b) The speed of sound in air is 330 m/s.

Calculate the distance x, leaving your answer in metres.

x = …… m [2]

FREE TEST PAPERS - FREETESTPAPER.COM

6 Fig. 6.1 shows an empty double walled container of mass 235 g which can hold up to 235 cm^3 of fluids.

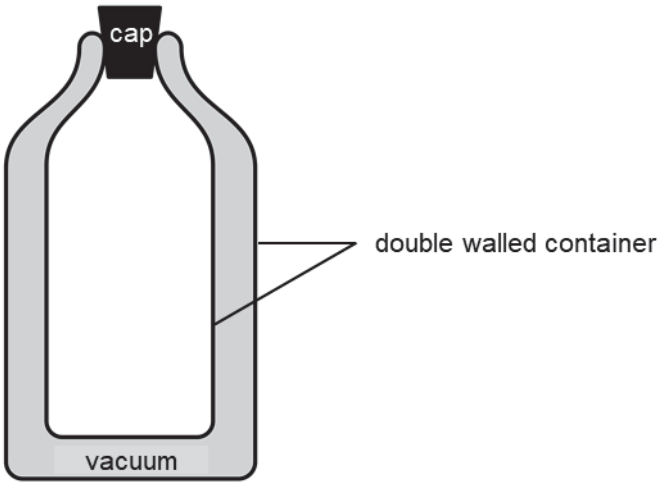

Fig. 6.1

State and explain whether the empty double walled container will float or sink in water. The density of water is 1.0 g/cm^3.

……

……

…… [2]

FREE TEST PAPERS - FREETESTPAPER.COM

7 Fig. 7.1 shows a simple balancing toy balanced on the tip of a finger.

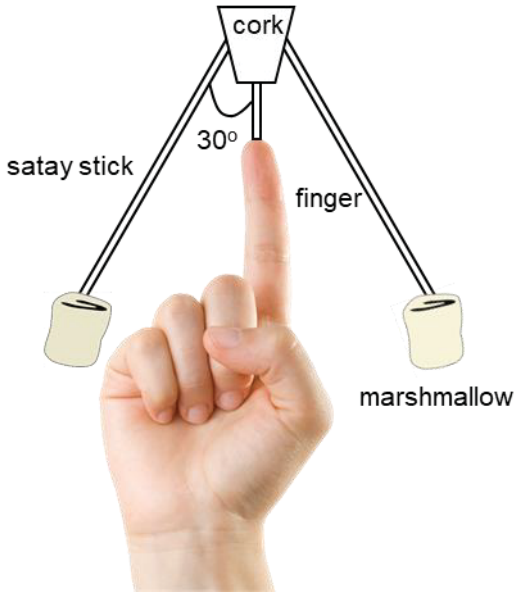

Fig. 7.1

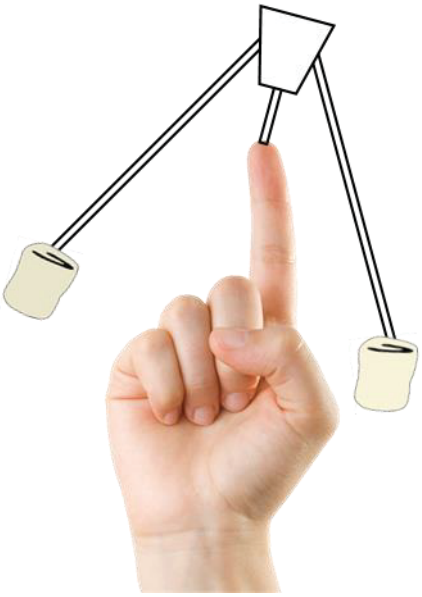

Fig. 7.2

(a) **(i)** Define the *centre of gravity* of an object.

…….....

……..... [1]

(ii) On Fig. 7.1, mark the position of the centre of gravity of the simple balancing toy with an 'X'. [1]

(b) Fig. 7.2 shows the simple balancing toy displaced on the tip of the finger.
Explain how the simple balancing toy is able to return to its position in Fig. 7.1.

…….

…….

……. [2]

(c) Without any changes to the materials used to construct the simple balancing toy, suggest a modification to make it more stable.

…….

……. [1]

FREE TEST PAPERS - FREETESTPAPER.COM

8 Fig. 8.1 shows a skier of mass 80 kg, ski down the slope from rest at X and reach a speed of 5.0 m/s at Y.

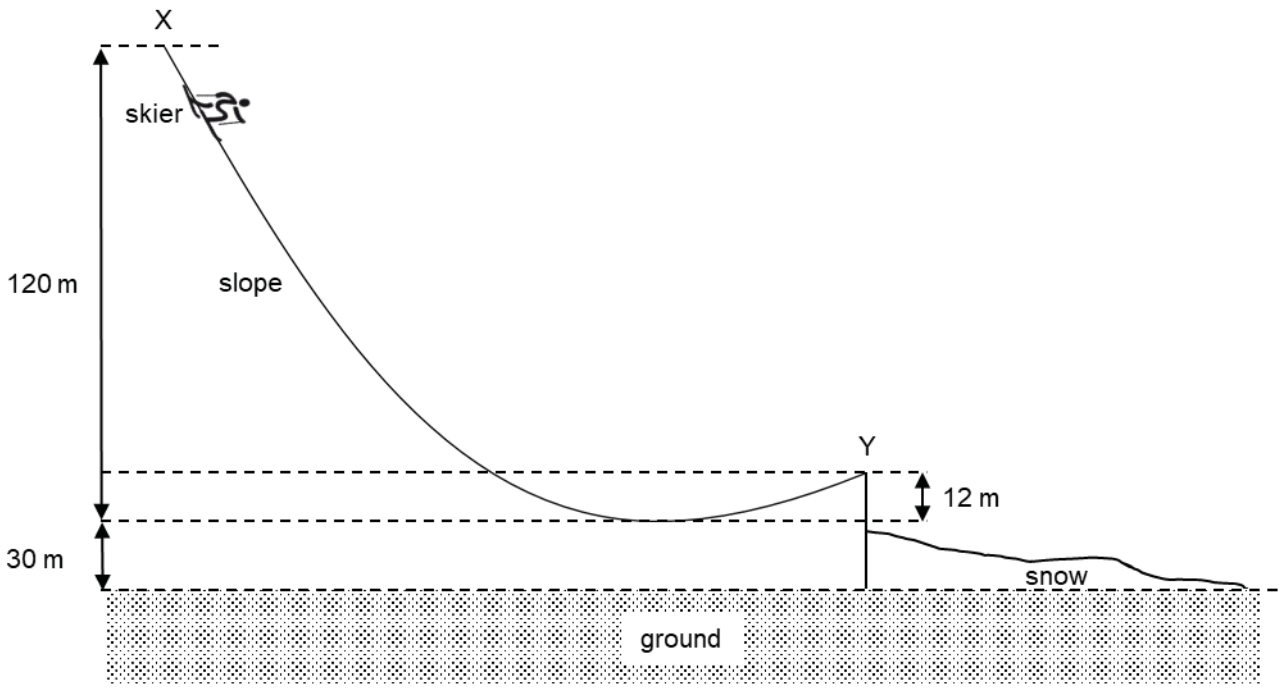

Fig. 8.1

(a) Define *work*.

……

…… [1]

(b) Calculate the work done against friction from X to Y.

The gravitational field strength *g* is 10 N/kg.

work done = …… [3]

FREE TEST PAPERS - FREETESTPAPER.COM

9 **(a)** Fig. 9.1 shows a gas in a sealed container at a pressure of 118 kPa connected to the left arm of a manometer. The right arm of the manometer is open to the atmosphere.

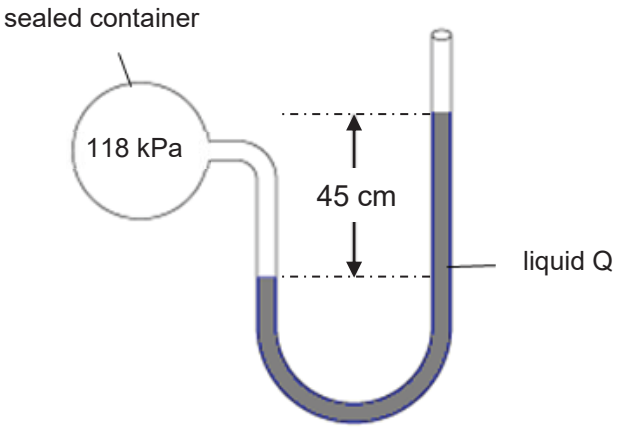

Fig. 9.1

Calculate the density of liquid Q.

The gravitational field strength *g* is 10 N/kg. The atmospheric pressure is 101 kPa.

density of liquid Q = …… [2]

FREE TEST PAPERS - FREETESTPAPER.COM

(b) Fig. 9.2 shows a mercury barometer placed under a pressure of one atmosphere. The density of mercury is 13 600 kg/m^3.

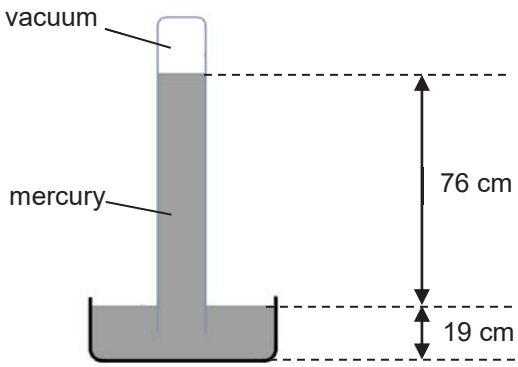

Fig. 9.2 (not to scale)

Liquid Q is used in place of mercury.

Calculate the height of the column of liquid Q when placed under a pressure of one atmosphere.

height of column of liquid Q = ... [1]

(c) **(i)** Define *pressure.*

..... [1]

(ii) Fig. 9.3 shows the caterpillar tracks found on excavators.

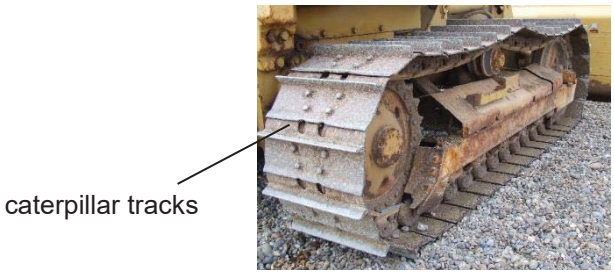

Fig. 9.3

Explain why caterpillar tracks, instead of wheels, are fitted on excavators on muddy ground.

.....

..... [1]

FREE TEST PAPERS - FREETESTPAPER.COM

10 Fig. 10.1 shows a flask filled with air and covered with a rubber bung.

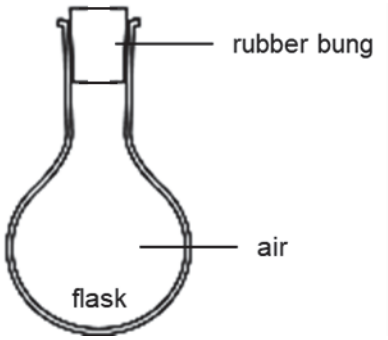

Fig. 10.1

When the flask is heated, the pressure of the air inside the flask increases and the rubber bung flies out.

(a) State the *kinetic theory of matter*.

……..……..…….....

……..……..……..... [1]

(b) Explain, using the kinetic theory of matter, why heating the air inside the flask causes the air pressure to increase.

……..……..……..…….....

……..……..……..…….....

……..……..……..…….....

……..……..……..…….....

……..……..……..……..... [3]

FREE TEST PAPERS - FREETESTPAPER.COM

11 Fig. 11.1 shows petrol being pumped into a can. Electrostatic charges build up on the petrol and the pipe.

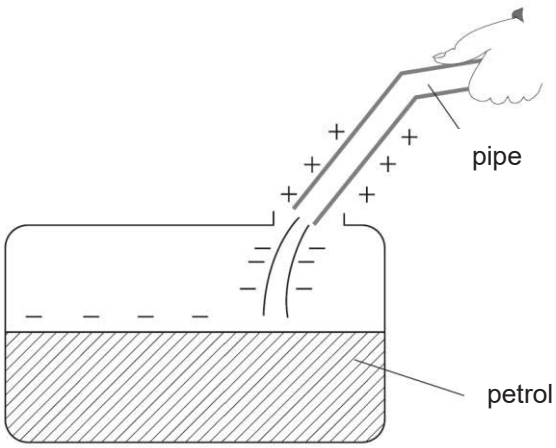

Fig. 11.1

(a) Explain why this is dangerous.

…….....……..

…….....……..

…….....…….. [2]

(b) Describe what can be done to stop the electrostatic charge building up in this way.

…….....……..

…….....…….. [1]

FREE TEST PAPERS - FREETESTPAPER.COM

12 Fig. 12.1 shows a circuit with three identical resistors R_1, R_2 and R_3.

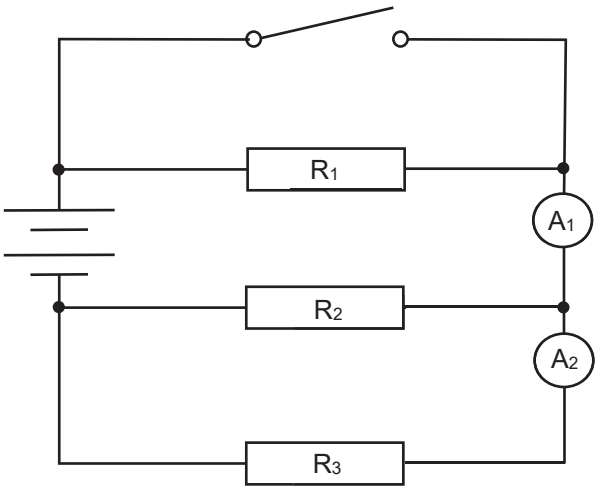

Fig. 12.1

(a) The switch is closed.

State and explain what happens to the reading of A_1 compared to when the switch is opened.

……..

…….. [1]

(b) R_2 is now replaced with a diode, ⊳|, pointing to the right. The switch remains closed.

State the ratio of the reading of A_1 to the reading of A_2.

…….. [1]

FREE TEST PAPERS - FREETESTPAPER.COM

13 Fig. 13.1 shows the three wires P, Q and R of an electrical appliance and their corresponding wires on the mains socket.

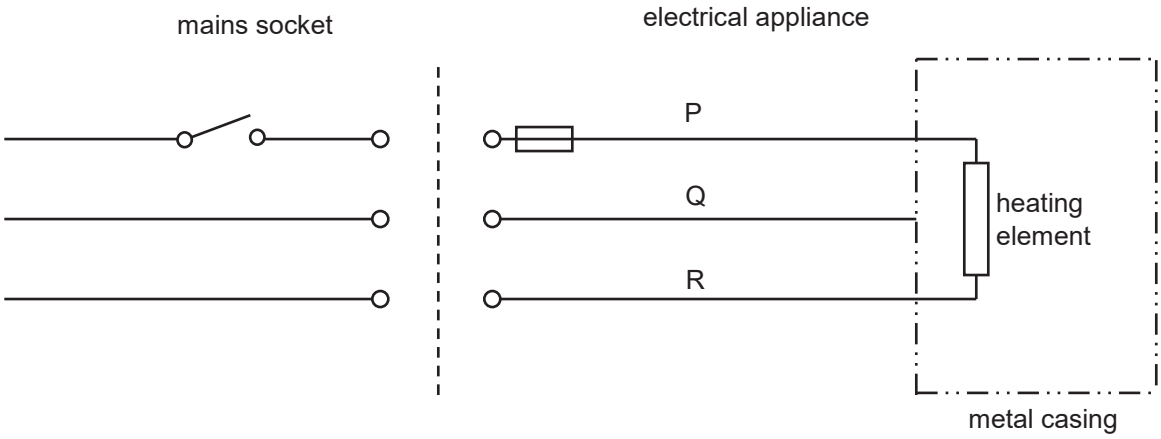

Fig. 13.1

(a) Name wire P.

…….. [1]

(b) State the colour of wire R.

…….. [1]

(c) Explain how wire Q serves as a safety feature.

……..

…….. [1]

(d) In some appliances, wire Q is not present.

State an additional safety feature that is present in place of wire Q.

…….. [1]

FREE TEST PAPERS - FREETESTPAPER.COM

14 **(a)** State two conditions required for a particle to experience a force in a magnetic field.

1. ……

……

2. ……

…… [2]

(b) Microwaves and a beam of fast-moving electrons enter a strong magnetic field, as shown in Fig. 14.1.

Fig. 14.1

The magnetic field acts only in the shaded region shown in Fig. 14.1. The direction of the magnetic field is out of the page.

On Fig. 14.1, sketch the paths of the microwaves and the electrons in the magnetic field. [3]

FREE TEST PAPERS - FREETESTPAPER.COM

Section B

Answer **all** the questions in this section.
Answer only one of the two alternative questions in **Question 17**.

15 The marathon is a long-distance race of about 42 km. Water on the skin of a marathon runner evaporates as he runs.

Data relevant to the marathon is given in the box.

mass of marathon runner: 70 kg
time taken by runner to complete the marathon: 4.5 hours
average body temperature before starting the marathon: 37 °C
body temperature above which overheating may cause serious damage: 40 °C
average production of thermal energy in one hour by the runner: 3.3×10^6 J
average loss of energy in one hour by evaporation from the skin: 2.2×10^6 J
average specific heat capacity of the human body: 3400 J/(kg °C)
specific latent heat of vaporisation of water at body temperature: 2.4×10^6 J/kg

The level of dehydration of a human body is measured by the percentage loss of body mass caused by evaporation. The table below shows three levels of dehydration.

level of dehydration	percentage of body mass lost by evaporation of water
mild dehydration	<3%
moderate dehydration	3–5%
severe dehydration	>5%

(a) Calculate the mass of water lost by evaporation from the skin of the runner in one hour.

mass of water lost = …… [2]

FREE TEST PAPERS - FREETESTPAPER.COM

(b) Assume that the runner only loses energy by evaporation from his skin.

Calculate the rise in temperature of his body in one hour of the race.

rise in temperature = …… [3]

(c) Using your answer to **(b)**, show that evaporation from his skin is not sufficient, on its own, to prevent overheating during the race.

……....

……....

……..... [1]

(d) One other mechanism for evaporation occurs in breathing. Water is vaporised in the lungs and is then exhaled.

Assume that there is no increase in the runner's body temperature during the race.

Calculate the mass of water vapour that the runner exhales during the **whole** race.

mass of water vapour = …… [2]

(e) Assume that the runner does not drink any water during the race.

Using your answers to **(a)** and **(d)**, determine the level of dehydration of the runner at the end of the race.

……..... [2]

FREE TEST PAPERS - FREETESTPAPER.COM

16 Fig. 16.1 shows a hovercraft which moves on a cushion of air trapped underneath it.

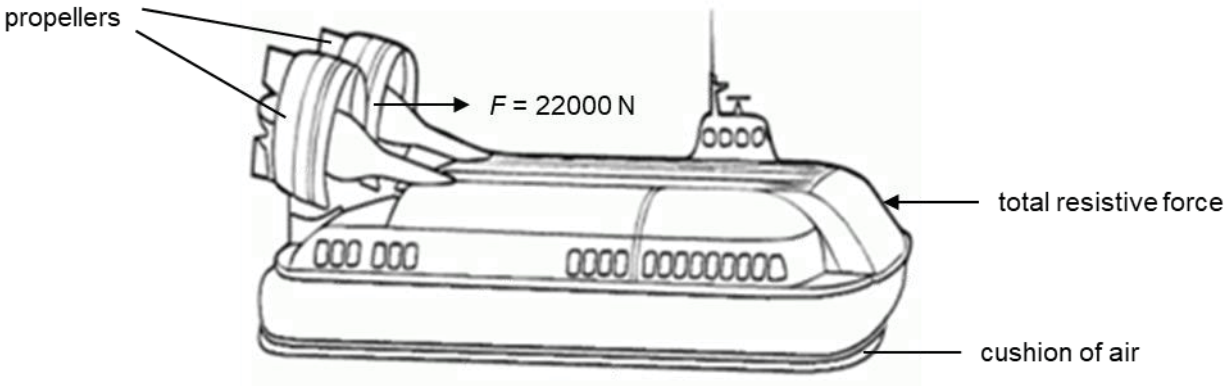

Fig. 16.1

(a) At an instant, the propellers produce a total forward force, *F* of 22000 N and experiences a total resistive force of 2000 N. The mass of the hovercraft is 25000 kg.

Calculate the acceleration of the hovercraft at this instant.

acceleration = …… [2]

(b) After some time, the hovercraft reaches a steady speed, even though the force *F* is unchanged.

Explain, in terms of the forces acting on the hovercraft, why the hovercraft will reach steady speed.

……

……

…… [2]

(c) Explain how the propeller is able to produce a forward force, *F*.

……

…… [1]

FREE TEST PAPERS - FREETESTPAPER.COM

(d) Fig. 16.2 shows how the speed, *v* of the hovercraft varies with time, *t* for part of its journey.

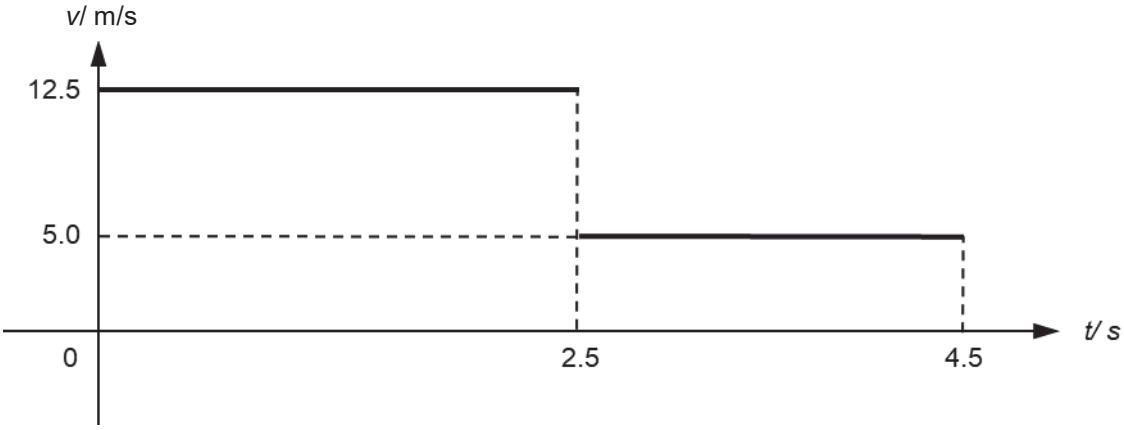

Fig. 16.2

(i) State the acceleration of the hovercraft between t = 0 s and t = 2.5 s.

……..…… [1]

(ii) Calculate the total distance travelled by the hovercraft in 4.5 s.

distance = …… [2]

(iii) On Fig. 16.3, sketch how the distance travelled, *d* of the hovercraft varies with time, *t*. You are **not** required to make any calculations.

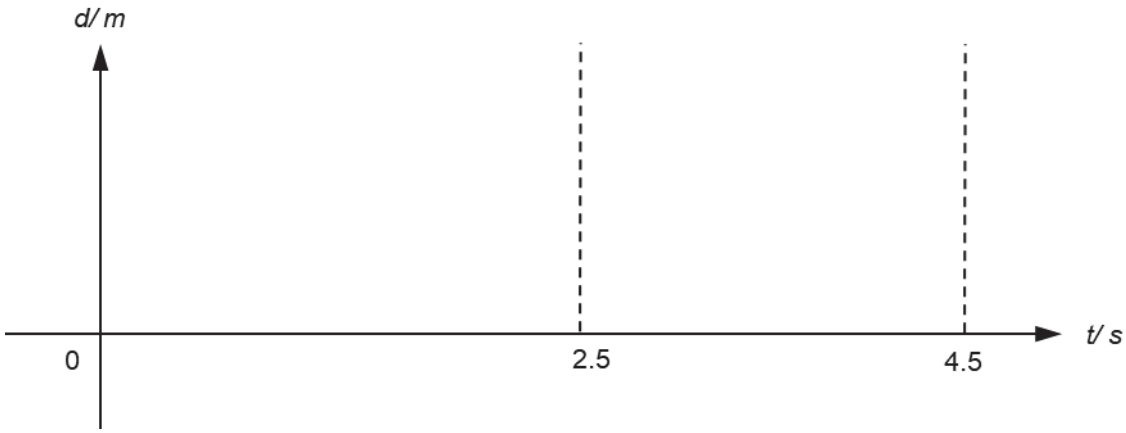

Fig. 16.3

[2]

FREE TEST PAPERS - FREETESTPAPER.COM

17 EITHER

Fig. 17.1 shows an electrical circuit used to determine the resistance of an unknown fixed resistor, R_T. Three fixed resistors of 100 Ω, 150 Ω and 450 Ω are used to provide varying resistance values, simulating the rheostat shown in the circuit diagram.

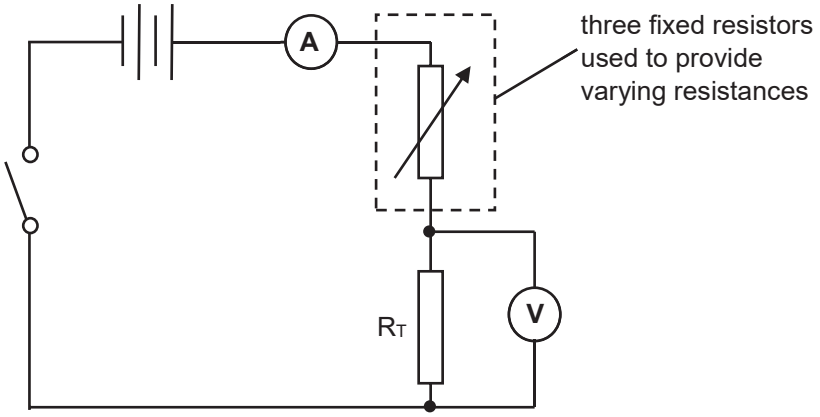

Fig. 17.1

To obtain each resistance value recorded in the first column of Fig. 17.2, **all** three fixed resistors are used. The resistance values are varied by placing the three resistors in different arrangements. The switch is then closed and the corresponding voltmeter and ammeter readings are recorded.

resistance / Ω	voltage / V	current / mA
P	5.64	120.1
213	2.14	46.4
232	1.99	43.2
510	0.97	21.6
Q	0.71	16.1

Fig. 17.2

(a) Given that P and Q respectively represent the smallest and largest possible resistance values obtainable,

(i) calculate P.

P = ... Ω [2]

(ii) calculate Q.

Q = ... Ω [1]

FREE TEST PAPERS - FREETESTPAPER.COM

(iii) Explain why the voltage measured across R_T decreases as the resistance values in the first column of Fig. 17.2 increases.

……..

…….. [1]

(iv) A student uses the results obtained for resistance of 232 Ω from Fig. 17.2 to correctly estimate the value of the unknown resistor, R_T.

Calculate the resistance obtained by the student.

resistance of R_T = …… [1]

(v) Using your answer in part **(iv)**, estimate the potential difference (p.d.) across the terminals of the batteries in the circuit.

p.d across terminals of batteries = …… [2]

(b) Fig. 17.3 shows the *I/V* characteristic graph of two light emitting diodes (LED).

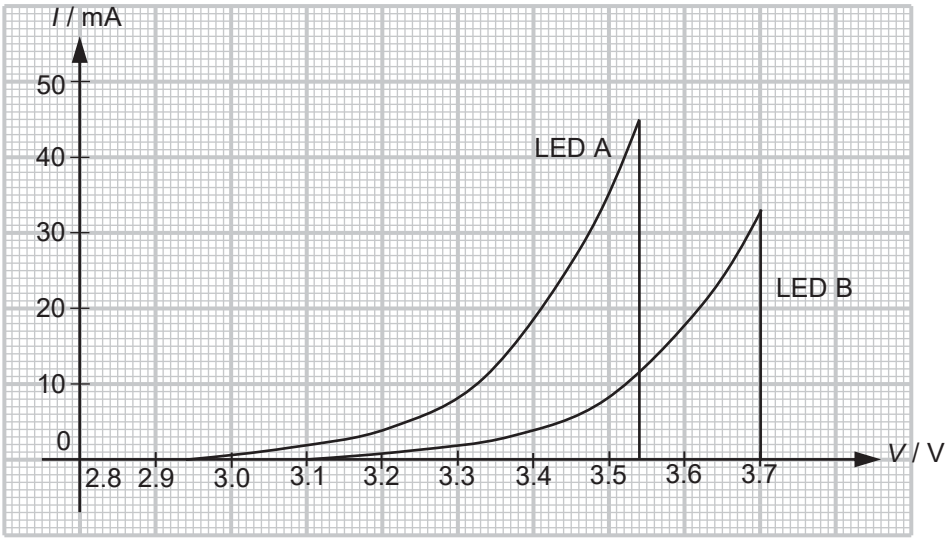

Fig. 17.3

(i) Describe how *I* varies with *V* for LED B.

……..

…….. [1]

FREE TEST PAPERS - FREETESTPAPER.COM

(ii) Assume that all the power supplied is converted to light for both LED A and LED B.

Determine which LED will be brighter at its maximum power dissipation. Show your working clearly.

…….. [2]

FREE TEST PAPERS - FREETESTPAPER.COM

OR

Fig. 17.4 represents the basic structure of a transformer.

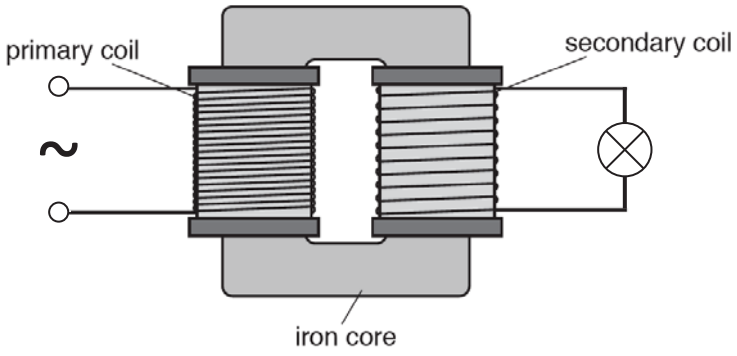

Fig. 17.4

(a) The secondary coil is connected to a lamp. When there is an alternating current in the primary coil, the lamp is lit.

When there is a direct current in the primary coil, the lamp is **not** lit.

(i) State **one** way in which an alternating current differs from a direct current.

…….....

……..... [1]

(ii) Explain why the lamp is **not** lit when there is a direct current in the primary coil.

…….....

…….....

……..... [2]

(b) An alternating voltage of 240 V is applied to the primary coil and a voltage is induced in the secondary coil. The primary coil has 560 turns.

Calculate the smallest number of complete turns in the secondary coil that would give an induced voltage of at least 8.0 V in the secondary coil.

number of turns = …… [2]

FREE TEST PAPERS - FREETESTPAPER.COM

(c) A student determines the input and output power of the transformer and calculates the efficiency of the transformer.

(i) The student uses voltmeters and ammeters that measure alternating voltages and currents.

On Fig. 17.4, draw two voltmeters and two ammeters that enable the input power and the output power of the transformer to be determined. [2]

(ii) State what is meant by *efficiency*.

…….....

…….....

……..... [1]

(iii) The current in the primary coil is 0.033 A. The current in the secondary coil is 0.72 A and the output voltage of the transformer is 8.0 V.

Calculate the efficiency of the transformer.

efficiency = …… [2]

END OF PAPER

FREE TEST PAPERS - FREETESTPAPER.COM

BLANK PAGE

FREE TEST PAPERS - FREETESTPAPER.COM