Visit

FREETESTPAPER.com

for more papers

Website: freetestpaper.com

Facebook.com/freetestpaper

Twitter.com/freetestpaper

Class	Register Number	Name

BARTLEY SECONDARY SCHOOL

GCE O-LEVEL PRELIMINARY EXAMINATIONS

PHYSICS **6091/01**

Sec 4 Express

Paper 1 Multiple Choice **4 Sep 2019**

1 hour

Candidates answer on the Multiple Choice Answer Sheet.
Additional Materials: Multiple Choice Answer Sheet

READ THESE INSTRUCTIONS FIRST

Write your class, register number and name on all the work you hand in.
Do not use staples, paper clips, highlighters, glue or correction fluid.

There are **forty** questions in this paper. Answer **all** questions. For each question there are four possible answers, **A, B, C** and **D**.

Choose the **one** you consider correct and record your choice in soft pencil on the separate Multiple Choice Answer Sheet.

Read the instructions on the Answer Sheet very carefully.

Each correct answer will score one mark. A mark will not be deducted for a wrong answer.
Any rough working should be done in this booklet.
The use of an approved scientific calculator is expected, where appropriate.

At the end of the examination, submit the Multiple Choice Answer Sheet.

This document consists of **20** printed pages.

Set by: LHL **[Turn over**

FREE TEST PAPERS - FREETESTPAPER.COM

Answer **all** questions.

For each question, there are four possible answers **A**, **B**, **C** and **D**.

Choose the **one** you consider correct and shade your choice on the Multiple Choice Answer Sheet.

1 Which of the following shows the best estimate of the diameter of Earth?

A 1.3×10^3 km
B 1.3×10^4 km
C 1.3×10^5 km
D 1.3×10^6 km

2 A micrometer is used to measure the thickness of a metal sheet.

Diagram 1 shows the reading on the micrometer when it is tightened with nothing between the jaws. Diagram 2 shows the reading taken with the metal sheet between the jaws.

diagram 1

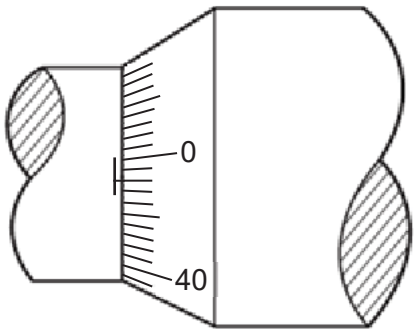

diagram 2

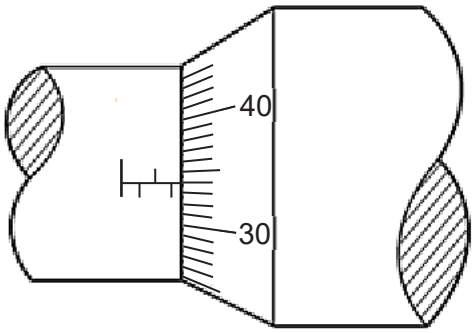

What is the thickness of the metal sheet?

A 1.82 mm
B 1.86 mm
C 3.32 mm
D 3.36 mm

FREE TEST PAPERS - FREETESTPAPER.COM

3 Three boys P, Q, and R participated in a race against one other. They started from the same starting point. The three diagrams show their speed-time graphs.

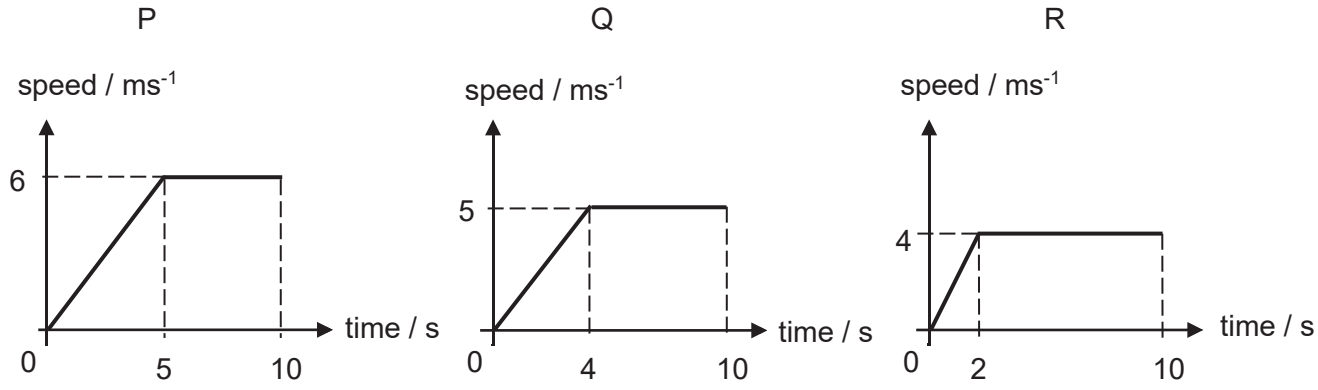

Which statement about the positions of the boys after 10 s of the race is correct?

A P leads Q and R

B Q leads P and R

C R leads P and Q

D P and R share first place

4 A skydiver falls at terminal velocity. He then opens his parachute.

Which row gives the direction of the resultant force on the skydiver and the direction of the acceleration of the skydiver, **immediately** after the parachute opens?

	resultant force	acceleration
A	downwards	downwards
B	downwards	upwards
C	upwards	downwards
D	upwards	upwards

FREE TEST PAPERS - FREETESTPAPER.COM

5 A sledge of mass 15 kg is pulled across a level ground with a constant speed of 0.50 ms^{-1} by a horizontal force of 30 N.

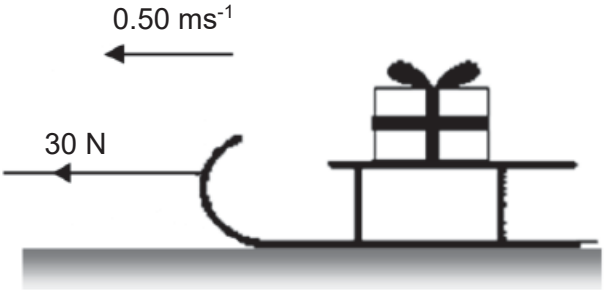

What is the frictional force experienced by the sledge?

A 7.5 N
B 23 N
C 30 N
D 120 N

6 A rock is hung from a rope and given a sideways push close to the surface of the Earth.

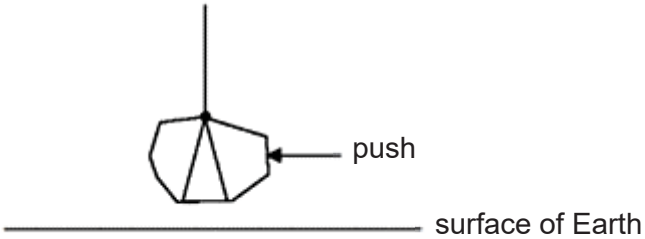

If the same arrangement were to be given the same sideways push close to the surface of the Moon, what would happen to the rock?

A The rock will move with more ease as it has less mass.

B The rock will move with more ease as it has less weight.

C The rock will move with the same ease as it has the same mass.

D The rock will move with the same ease as it has the same weight.

FREE TEST PAPERS - FREETESTPAPER.COM

7 An astronaut conducted an experiment on Mars in which she placed a rock on a spring balance and then on a beam balance. The gravitational field strength of Mars is larger than that of the Moon.

Which set of results is correct when the same experiment with the same rock was conducted on the Moon?

	spring balance reading	beam balance reading
A	greater than in Mars	less than in Mars
B	greater than in Mars	same as in Mars
C	smaller than in Mars	less than in Mars
D	smaller than in Mars	same as in Mars

8 Two immiscible liquids, P and Q, are poured into a beaker. After the liquids have settled, an object R is placed in the beaker. The diagram below shows the final position of object R.

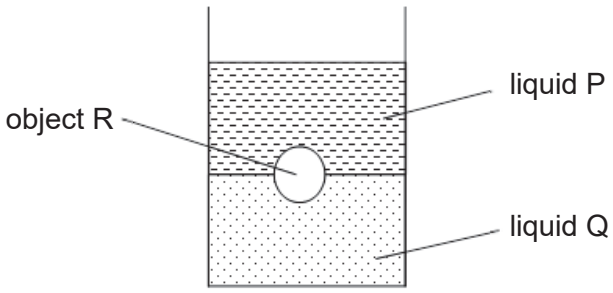

What conclusion can be made?

A Object R is denser than both liquids P and Q.

B Object R is denser than liquid P but less dense than liquid Q.

C Object R is denser than liquid Q but less dense than liquid P.

D Object R is less dense than both liquids P and Q.

FREE TEST PAPERS - FREETESTPAPER.COM

9 The diagram shows a toy balanced on the edge of a table and at rest. The toy has a metal ball attached to it.

Where is the likely centre of gravity of the toy?

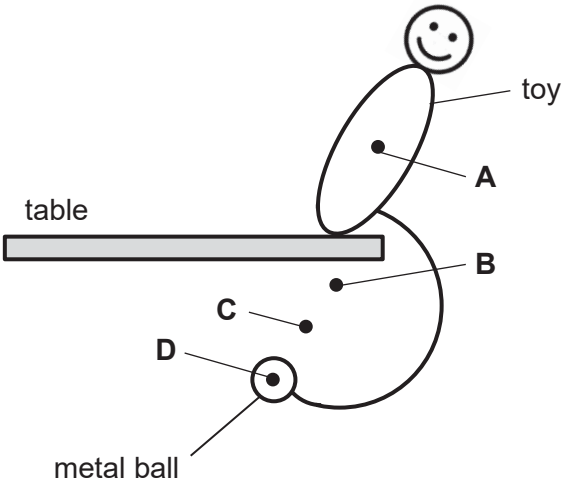

10 Three identical hollow pipes X, Y and Z have one or two identical weights attached to their inner surfaces as shown below.

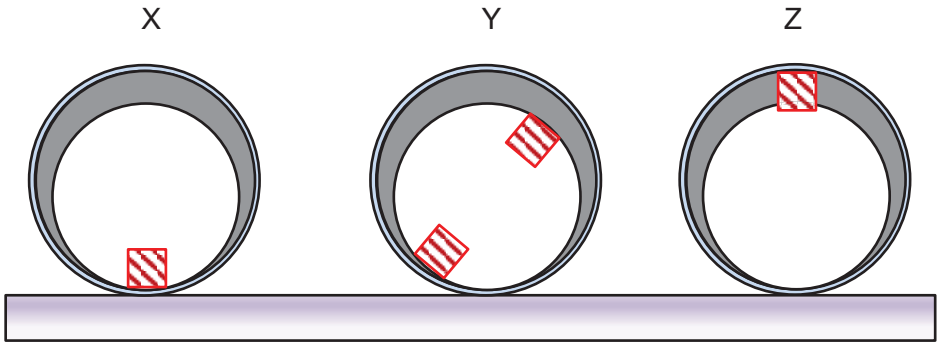

Which row best describes the stability of the pipes?

	X	Y	Z
A	neutral equilibrium	stable equilibrium	unstable equilibrium
B	neutral equilibrium	unstable equilibrium	stable equilibrium
C	stable equilibrium	neutral equilibrium	unstable equilibrium
D	stable equilibrium	unstable equilibrium	neutral equilibrium

FREE TEST PAPERS - FREETESTPAPER.COM

11 A block was pulled up along a slope.

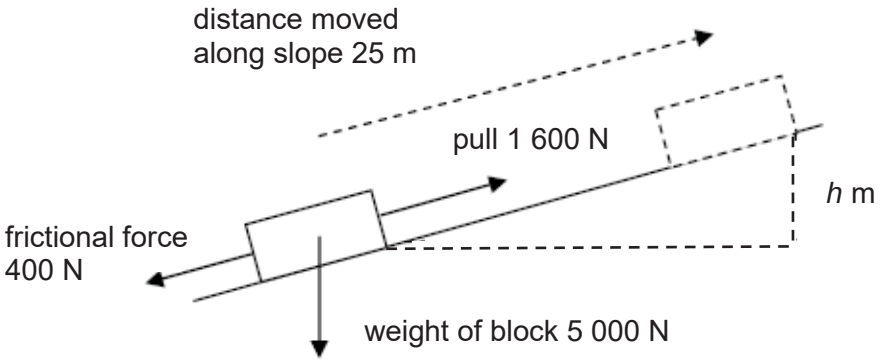

What is the magnitude of *h*, the increase in vertical height of the block?

A 2.0 m
B 6.0 m
C 8.0 m
D 10 m

12 Alan, Darrel, Jake and Kent squat on concrete steps as shown. Each person carries a sphere which is of the same size but of different mass. They drop the spheres onto a smooth level sand pit.

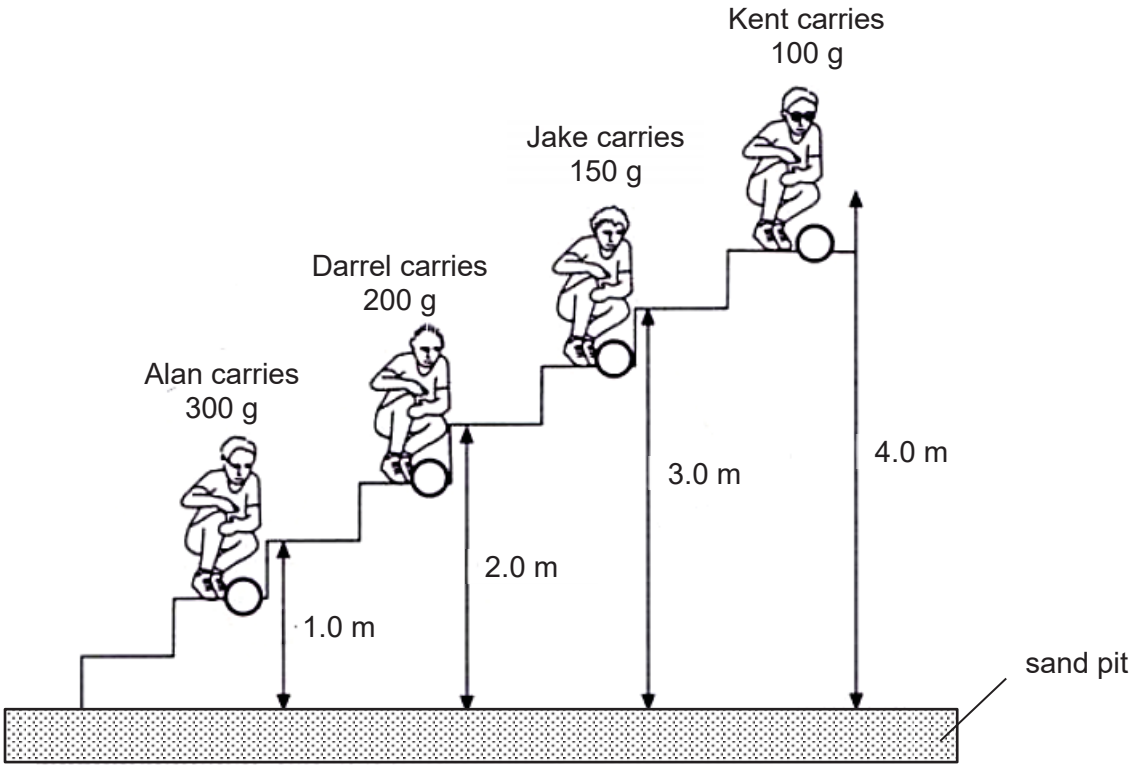

Who carries the sphere which will sink the deepest in the sand?

A Alan
B Darrel
C Jake
D Kent

FREE TEST PAPERS - FREETESTPAPER.COM

13 A simple mercury barometer is used to measure atmospheric pressure as shown below.

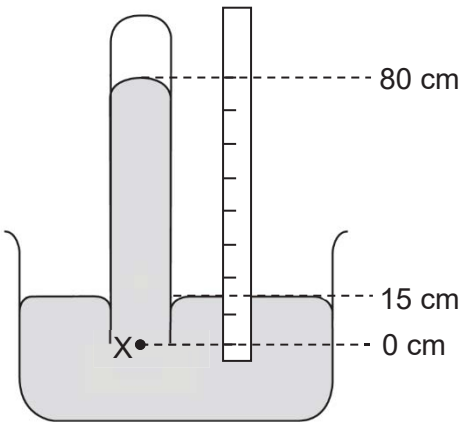

What is the pressure at X?

A 150 mm Hg
B 650 mm Hg
C 800 mm Hg
D 950 mm Hg

14 A glass vessel is connected to a side-arm through a tap.

With the tap closed, the depth of water in the vessel is *h*. When the tap is opened, water flows into the side-arm. The depth of water in the vessel falls.

The diagram on the right shows the water levels before they have settled.

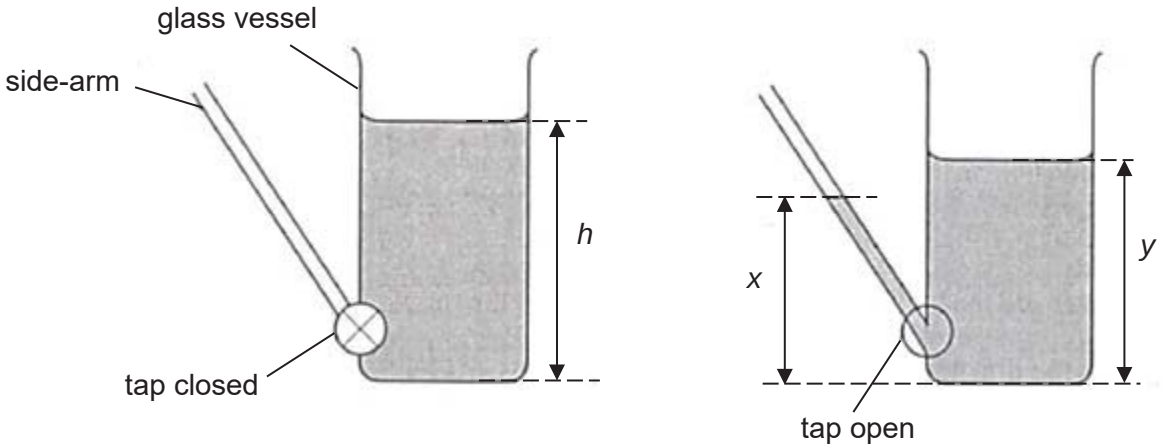

When the levels have settled, which statement is true?

A $h = x$
B $y = x$
C $h = y + x$
D $h = y - x$

FREE TEST PAPERS - FREETESTPAPER.COM

15 A fixed mass of gas is compressed while kept at constant temperature.

How will the properties of the molecules of the gas change?

	average distance between molecules	frequency of collisions between the molecules and the walls of the container	average speed of molecules
A	decreased	decreased	increased
B	decreased	increased	no change
C	increased	decreased	no change
D	no change	increased	decreased

16 A centimetre scale is fixed next to an unmarked mercury-in-glass thermometer. At ice point the length of the mercury thread is 1.5 cm. At 60 °C, the length of the mercury thread increases to 9.5 cm.

What is the length of the mercury thread at steam point?

A 13.3 cm
B 14.3 cm
C 14.8 cm
D 15.8 cm

17 A Brownian motion experiment involving smoke particles in air was conducted.

What best explains why heavy particles settle down quickly but very small particles remain suspended for long period of time?

A Air pressure has a greater effect on smaller particles.
B Random molecular bombardment by air molecules keeps the small particles suspended.
C The earth's gravitational field does not act on very small particles.
D The small smoke particles have the same density as air.

FREE TEST PAPERS - FREETESTPAPER.COM

18 A student filled an upright ring-shaped container completely with warm water. He then placed a pack of dry ice at a corner of the container.

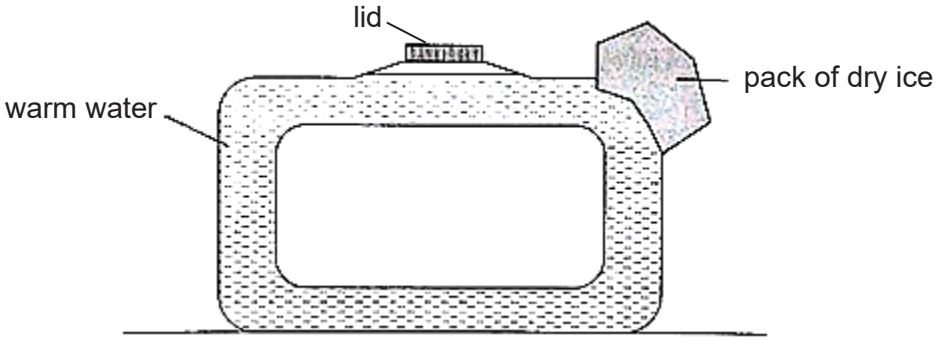

Which diagram correctly illustrates the convection current that was set up?

A

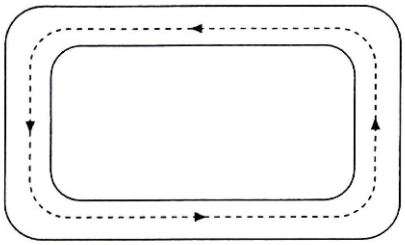

B

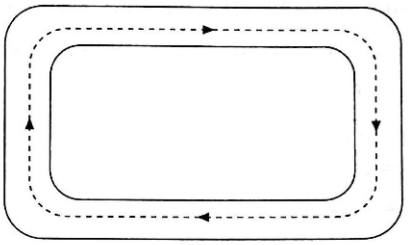

C

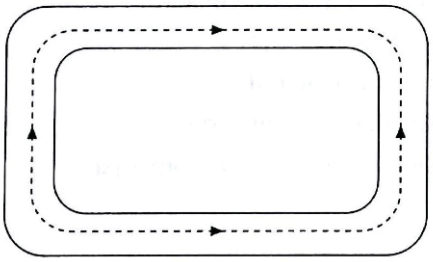

D

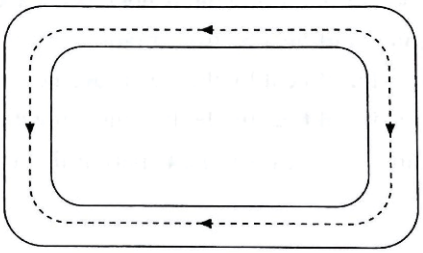

FREE TEST PAPERS - FREETESTPAPER.COM

19 A metal box has four different surfaces of equal area: dull black, shiny black, dull silver and shiny silver.

The box is filled with boiling water so that each surface is at the same temperature. A sensor measures the amount of radiation from each surface.

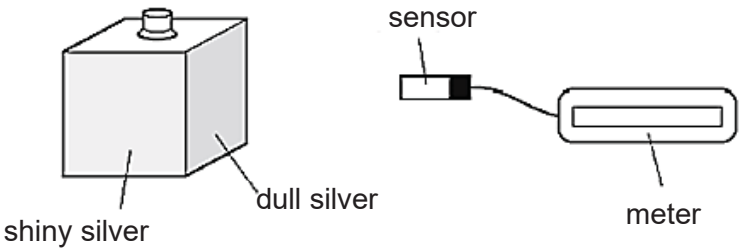

Which surface emits radiation at the slowest rate and which surface emits radiation at the fastest rate?

	emits radiation slowest	emits radiation fastest
A	dull black	shiny silver
B	dull silver	shiny black
C	shiny black	dull silver
D	shiny silver	dull black

20 Two liquids X and Y of equal weight are put in identical vessels, and thermal energy is supplied to them at the same rate. The temperature-time graphs are as shown.

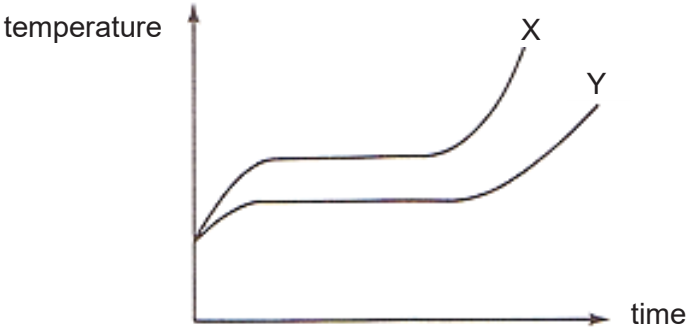

Which statement(s) is(are) true?

I Y has a higher freezing point than X.

II Y at liquid state has a larger specific heat capacity compared to X at liquid state.

III Y has a larger specific latent heat of vaporisation than X.

A II only

B III only

C I and II only

D II and III only

FREE TEST PAPERS - FREETESTPAPER.COM

21 Some wax in a test tube was heated till it melted. It was then allowed to cool. The temperature-time graph during the cooling process is shown.

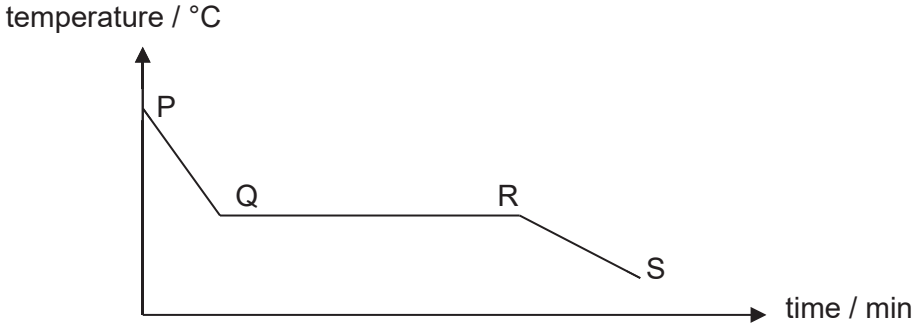

Which statement is correct?

A Along PQ, the molecules gain internal energy.

B Along QR, the molecules lose kinetic energy.

C Along QR, the molecules lose potential energy.

D Along RS, the molecules gain potential energy.

22 Air is blown into ether through the glass tube as shown in the diagram.
After some time, it is observed that the film of water freezes into ice.

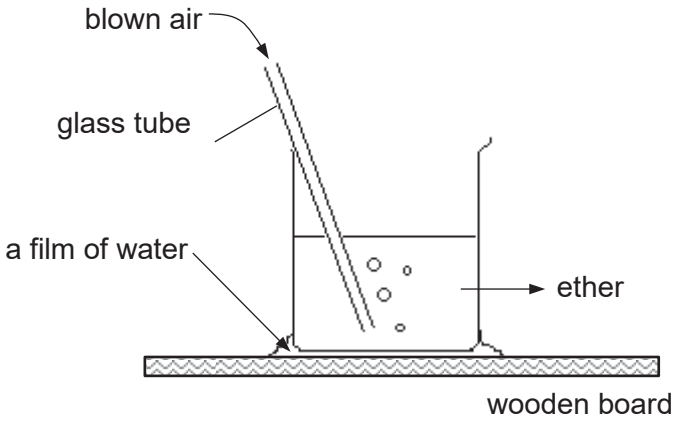

Which option best describes the processes that result from blowing the air?

	rate of evaporation of ether	temperature of ether	heat transfer
A	decreases	falls	from ether to water
B	decreases	rises	from ether to water
C	increases	falls	from water to ether
D	increases	rises	from water to ether

FREE TEST PAPERS - FREETESTPAPER.COM

23 Water waves can be used to demonstrate refraction by passing them in a trough of water of different depths.

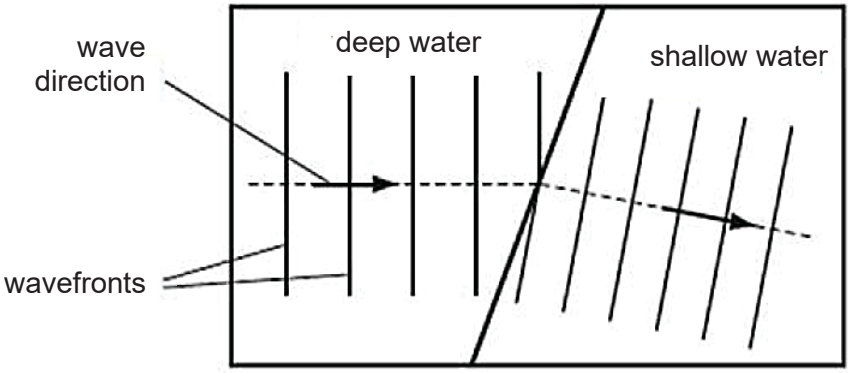

Which statement describes why the water wave changes direction as it passes into shallow water?

A The frequency of the wave decreases.

B The frequency of the wave increases.

C The speed of the wave decreases.

D The speed of the wave increases.

24 Which statement about the components of the electromagnetic spectrum is **not** correct?

A Microwaves have shorter wavelengths compared to those of radio waves and they are used in airport security to detect metallic objects in passengers' baggage.

B Radio waves have lower frequencies compared to those of gamma rays and they are used in television broadcasts.

C Visible light have higher frequencies compared to those of microwaves and they are used in lasers to weld metals together.

D X-rays have shorter wavelengths compared to those of ultraviolet rays and they are used to check flaws in metal welds.

25 A student holds a sheet of paper with letters on it facing a plane mirror. The letters on the paper are shown below.

What does the student see in the mirror?

A

B

C

D

FREE TEST PAPERS - FREETESTPAPER.COM

26 The figure shows a semi-circular glass slab with centre O. The glass has a critical angle of 45°.

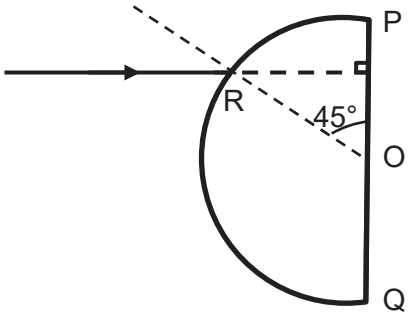

What happens when a ray of light, perpendicular to the diameter POQ, is incident at R?

A The light ray emerges at O.

B The light ray emerges at some point between O and P.

C Total internal reflection occurs at O.

D Total internal reflection occurs at some point between O and P.

27 The converging lens in a camera is used to make an image on a film.

At which point could an object be placed so that it forms a diminished image?

28 The diagram shows the trace on a cathode-ray oscilloscope when a microphone which is connected to it picks up a sound.

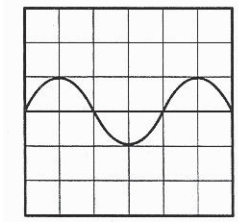

Which trace is obtained when the sound wave is changed to one that has the same loudness but of higher pitch?

A

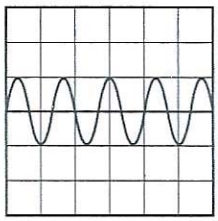

B

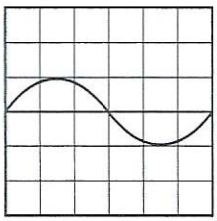

C

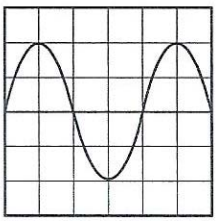

D

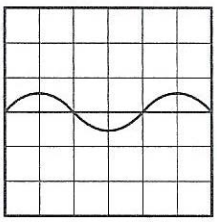

FREE TEST PAPERS - FREETESTPAPER.COM

29 An attendant is filling up a car with petrol at a petrol station.

Which of the following describes how electrostatic charges becomes a hazard?

A As the car is filled with petrol, the petrol vapour gets ignited by the sparks between the attendant and the car when they discharge accidentally.

B As the car is not earthed, charges on the car ignite the fuel inside the car's petrol tank.

C Charges on the car flow through the hose to the underground petrol reservoir, causing the petrol to catch fire.

D The attendant gains charges due to friction of his clothes and he gets an electric shock when he touches the car.

30 The graph shows how the current flowing through a 12 V lamp varies with the potential difference (p.d.) across the lamp.

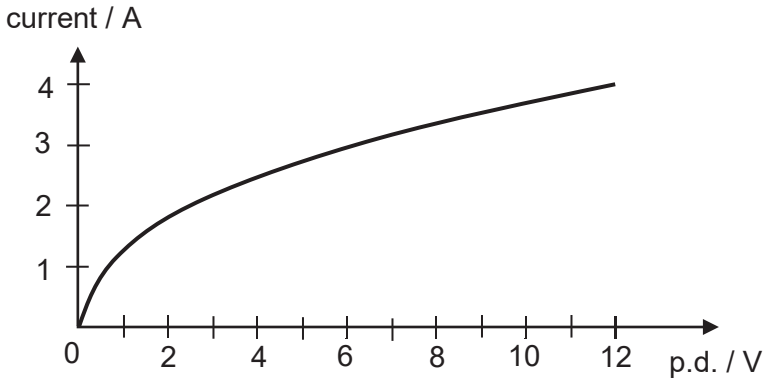

From the graph, which statement correctly describes the resistance of the lamp as the p.d. increases?

A The resistance of the lamp decreases throughout the voltage range.

B The resistance of the lamp increases at first and then decreases.

C The resistance of the lamp increases throughout the voltage range.

D The resistance of the lamp remains constant.

FREE TEST PAPERS - FREETESTPAPER.COM

31 A piece of wire initially has a resistance of 48 Ω. This wire is then stretched evenly until it is twice its initial length as shown below. The volume of the wire remains unchanged.

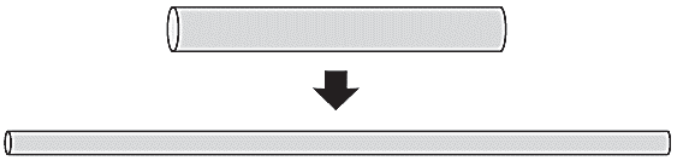

What is the new resistance of the wire?

A 48 Ω
B 96 Ω
C 192 Ω
D 384 Ω

32 A filament lamp is connected to a 12 V battery as shown.

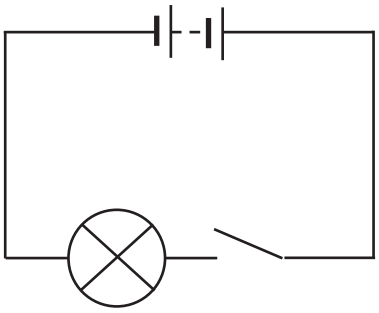

When the circuit is switched on for 2.0 minutes, 4.0 C of charges flow through the circuit.

What is the amount of electrical energy that is converted into light and thermal energy in the lamp?

A 6.0 J
B 24 J
C 48 J
D 96 J

FREE TEST PAPERS - FREETESTPAPER.COM

33 A d.c. circuit is set up as shown. The *electromotive force* of the battery is 12 V.

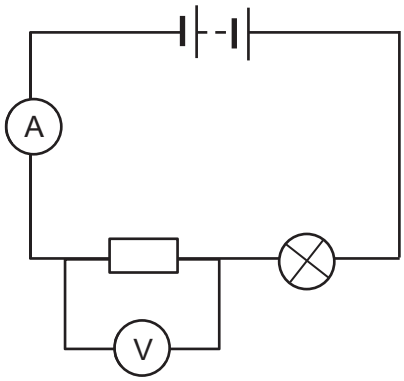

What is meant by the *electromotive force* of the battery is 12 V?

A It takes 1.0 s to drive 12 C of charge around the circuit.

B It takes 12 s to drive 1.0 C of charge around the circuit.

C It takes 1.0 J of energy to drive 12 C of charge around the circuit.

D It takes 12 J of energy to drive 1.0 C of charge around the circuit.

34 Each lamp in the circuit below is rated 9.0 V, 36 W. **A, B, C** and **D** are 6 A fuses.

Which fuse will blow when the switch is closed?

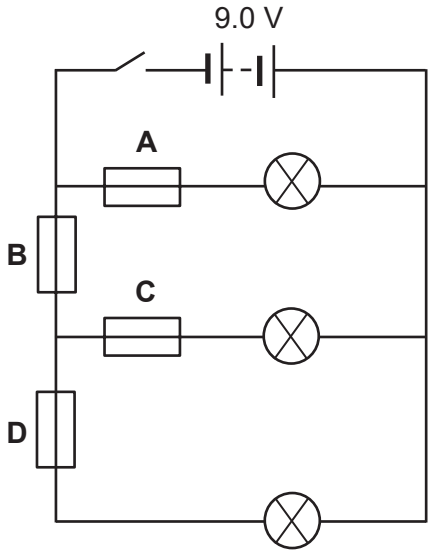

FREE TEST PAPERS - FREETESTPAPER.COM

35 The diagram shows the circuit formed when a rice-cooker is plugged into a mains socket.

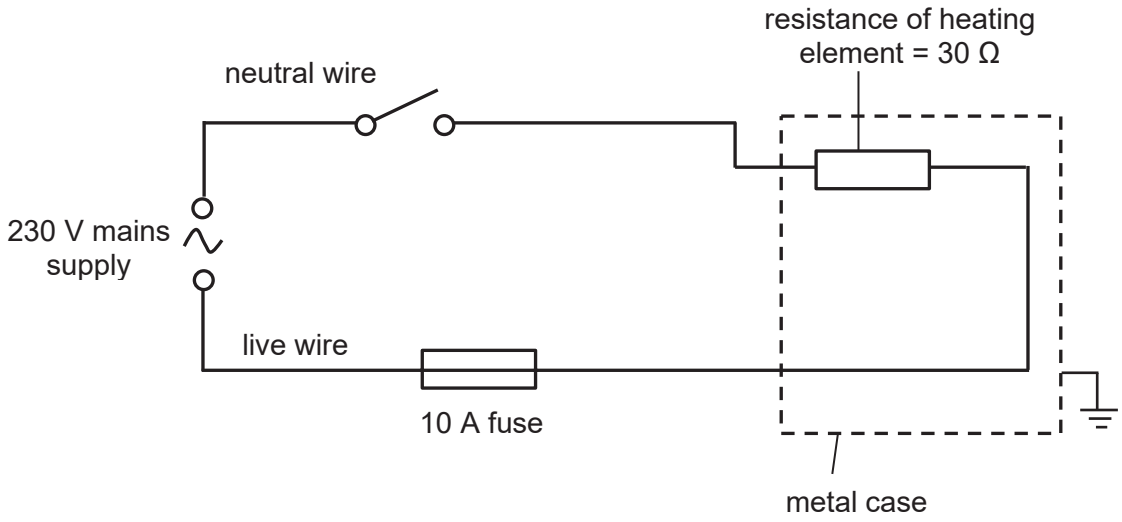

What is the fault in this circuit arrangement?

A The earth wire is connected wrongly.

B The fuse is connected to the wrong wire.

C The fuse rating is too low.

D The switch is connected to the wrong wire.

36 The diagram shows the direction of the compass needle when placed near two bar magnets.

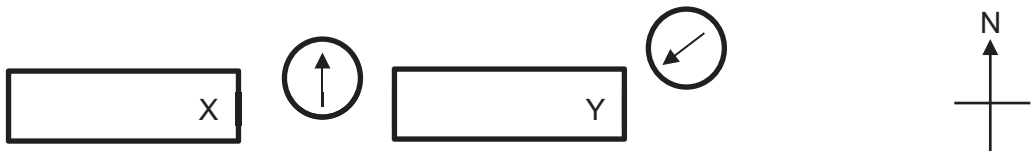

What are the likely poles at X and Y?

	pole at X	pole at Y
A	North	South
B	North	North
C	South	North
D	South	South

FREE TEST PAPERS - FREETESTPAPER.COM

37 Four metal rods are placed, one at a time, inside a coil of copper wire.

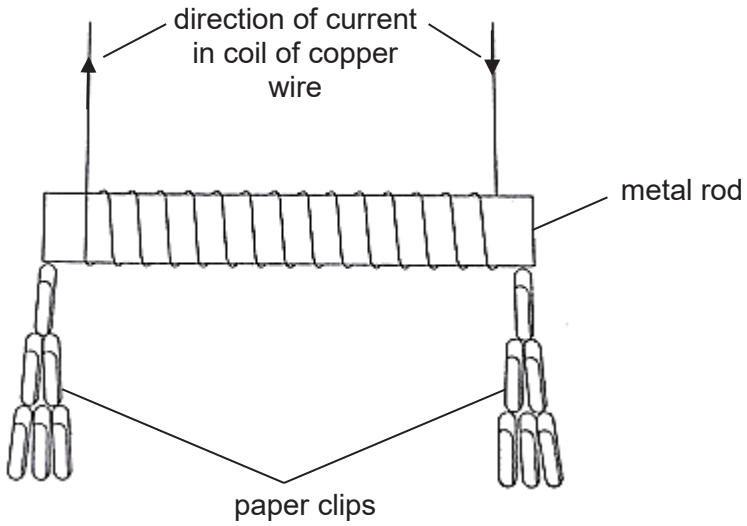

The table below gives the results of the experiment.

Which rod would be the most suitable to use for the core of a coil in a circuit breaker?

metal rod	number of paper clips picked up when there is current in the coil	number of paper clips still attracted when the current is switched off
A	1	0
B	20	2
C	35	0
D	35	30

38 The diagram below shows a positive charge entering a magnetic field directed into the paper.

Which path correctly illustrates the motion of the positive charge?

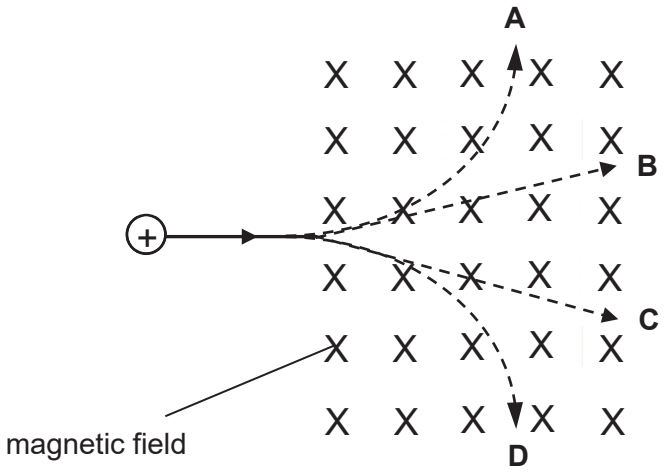

FREE TEST PAPERS - FREETESTPAPER.COM

39 A solenoid is placed in between a magnet and an iron nail that are freely suspended from the ceiling. The magnet is then moved away from the solenoid as shown.

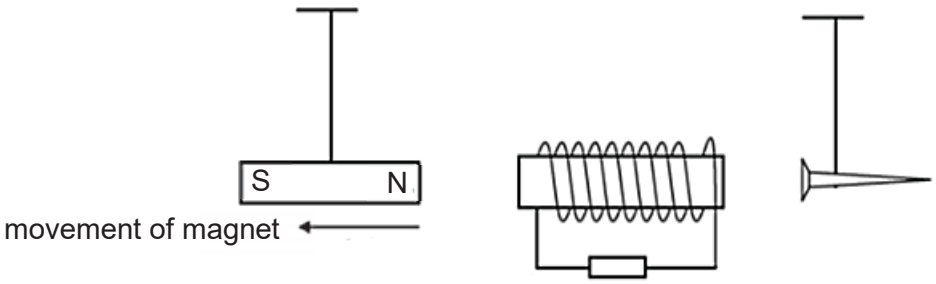

What is the direction of the current flowing through the fixed resistor and the direction that the iron nail moves?

	direction of current through the resistor	direction of movement of iron nail
A	to the left	away from solenoid
B	to the left	towards solenoid
C	to the right	away from solenoid
D	to the right	towards solenoid

40 A supply of peak value 5.0 V and of frequency 50 Hz is connected to the Y-input terminals of a cathode ray oscilloscope. The Y-gain and time-base settings are set at 5.0 V per division and 10 ms per division respectively.

Which trace is obtained?

A

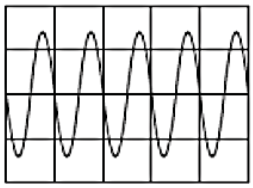

B

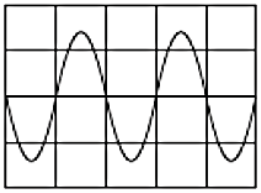

C

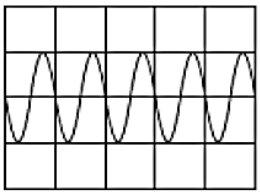

D

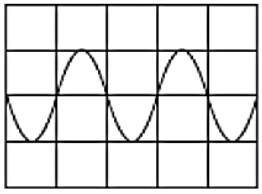

FREE TEST PAPERS - FREETESTPAPER.COM

Q1	Q2	Q3	Q4	Q5	Q6	Q7	Q8	Q9	Q10
B	B	A	D	C	C	D	B	B	C
Q11	Q12	Q13	Q14	Q15	Q16	Q17	Q18	Q19	Q20
B	C	C	B	B	C	B	B	D	D
Q21	Q22	Q23	Q24	Q25	Q26	Q27	Q28	Q29	Q30
C	C	C	A	B	B	A	A	A	C
Q31	Q32	Q33	Q34	Q35	Q36	Q37	Q38	Q39	Q40
C	C	D	B	D	A	C	A	B	D

FREE TEST PAPERS - FREETESTPAPER.COM

Class	Register Number	Name

BARTLEY SECONDARY SCHOOL

GCE O-LEVEL PRELIMINARY EXAMINATIONS

PHYSICS **6091/02**

Sec 4 Express

Paper 2 Theory **20 Sep 2019**

1 hours 45 minutes

Candidates answer on the Question Paper.
Additional Materials: NIL

READ THESE INSTRUCTIONS FIRST

Write your class, register number and name on all the work you hand in.
Write in dark blue or black pen on both sides of the paper.
You may use a soft pencil for any diagrams and graphs.
Do not use staples, paper clips, highlighters, glue or correction fluid.

Section A
Answer **all** questions.

Section B
Answer **all** questions. Question 12 has a choice of parts to answer.

Candidates are reminded that **all** quantitative answers should include appropriate units.
The use of an approved scientific calculator is expected, where appropriate.
Candidates are advised to show all their working in a clear and orderly manner, as more marks are awarded for sound use of Physics than for correct answers.

At the end of the examination, submit this question paper.
The number of marks is given in brackets [ ] at the end of each question or part question.

For Examiner's Use	
Section A	
Section B	
Total	

This document consists of **21** printed pages and **1** blank page.

Set by: **LHL** **[Turn over**

FREE TEST PAPERS - FREETESTPAPER.COM

Section A

Answer **all** the questions in the spaces provided.

1 When out in the open sea, ship X and ship Y use a steel cable to transfer cargo from one to the other. Fig. 1.1 shows how the steel cable looks like when a cargo of mass 130 kg is exactly in between the two ships. The ends of the cable connected to each ship are positioned at the same height above the surface of the sea. The gravitational field strength is 10 N/kg.

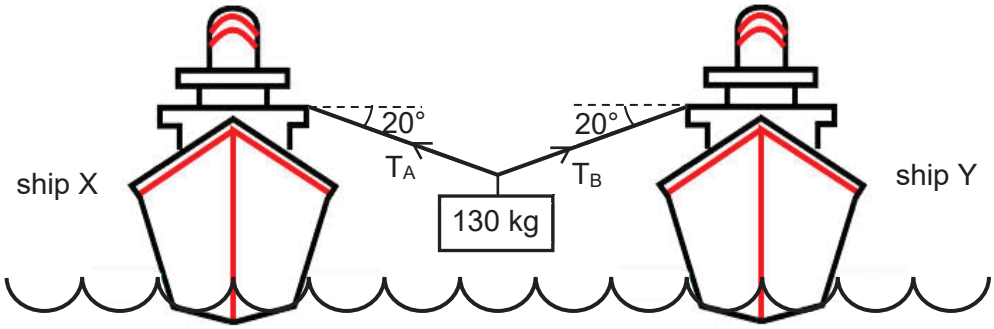

Fig. 1.1

(a) Calculate the weight exerted by the cargo.

weight of cargo =.....[1]

(b) By means of a scaled drawing, find the tension in the steel cable.

tension in the cable = ...[3]

FREE TEST PAPERS - FREETESTPAPER.COM

2 **(a)** State the *principle of moments*.

.....

.....

.....

.....[2]

(b) Fig. 2.1 shows part of the boiler of a steam engine. Thermal energy is transferred to the water in the boiler by conduction.

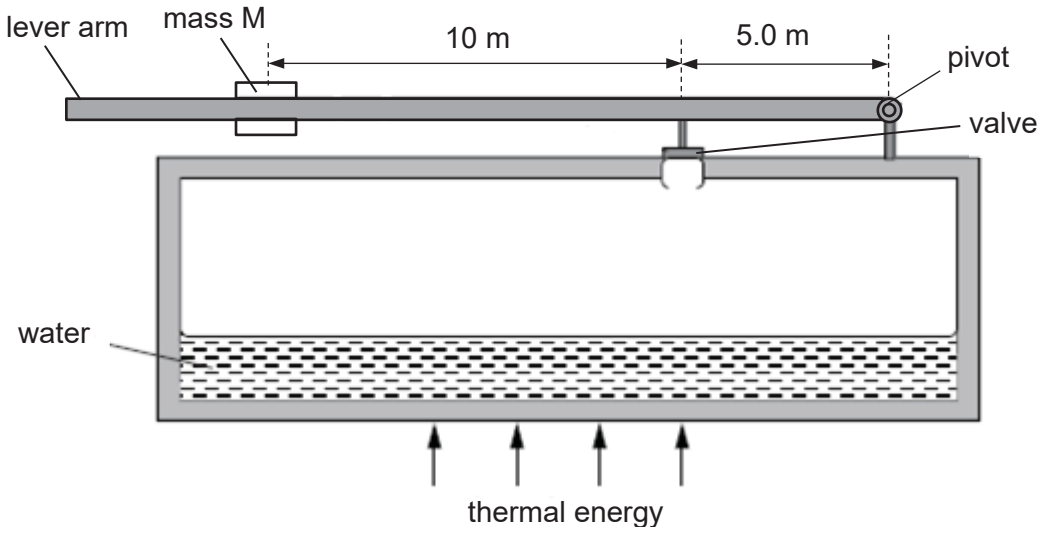

Fig. 2.1

The boiler has a valve which allows steam to escape if the pressure inside the boiler is too high. The pressure in the boiler is controlled by the valve connected to a pivoted lever arm. The uniform lever arm has a movable mass M which is used to adjust the pressure at which the valve opens.

(i) The surface area of the valve in contact with the steam is 4.0×10^{-2} m^2.

Calculate the upward force on the valve when the pressure in the boiler is 20 kPa.

force = ...[2]

FREE TEST PAPERS - FREETESTPAPER.COM

(ii) The length of the uniform lever arm is 20 m and the weight of the lever arm is 100 N. By placing mass M 10 m away from the valve, the valve opens when the pressure in the boiler is 20 kPa.

Calculate the weight of M.

weight = ...[2]

(iii) State how the mass M should be moved so that the valve of the boiler is opened at a pressure higher than 20 kPa. Explain your answer.

.....

.....

.....

.....

.....[2]

FREE TEST PAPERS - FREETESTPAPER.COM

3 **(a)** Fig. 3.1 shows a soccer ball on the ground being stepped on by a foot.

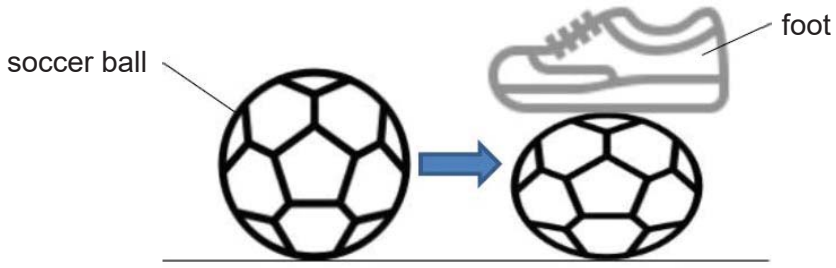

Fig. 3.1

It is observed that the volume of the soccer ball decreases while the temperature of the air in the ball remains the same.

Using the kinetic model of matter, state and explain how pressure of the air in the ball changes.

.....

.....

.....

.....

.....

..... [3]

(b) Fig. 3.2 shows a mercury manometer that is being used to measure the pressure in a chamber. The pressure due to the air trapped in the chamber is found to be 810 mm Hg. The density of mercury is 13 600 kg/m^3.

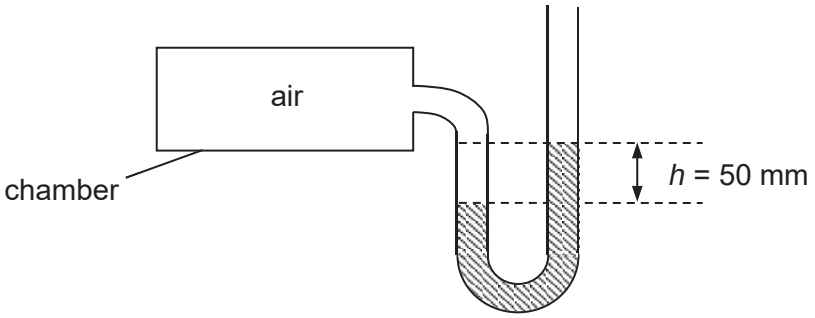

Fig. 3.2

Determine the atmospheric pressure, leaving your answer in Pa.

pressure = ...Pa [2]

FREE TEST PAPERS - FREETESTPAPER.COM

4 Fig. 4.1 shows an igloo, which is a small dome-shaped house built by Eskimos from blocks of hard snow. The Eskimos live in very cold regions near to the North pole.

The entrance is dug lower than the sleeping area to create a cold sink where cold air flows to. The cross-section of an igloo is shown in Fig. 4.2.

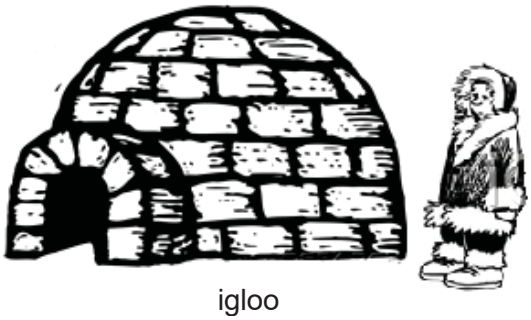

igloo

Fig. 4.1

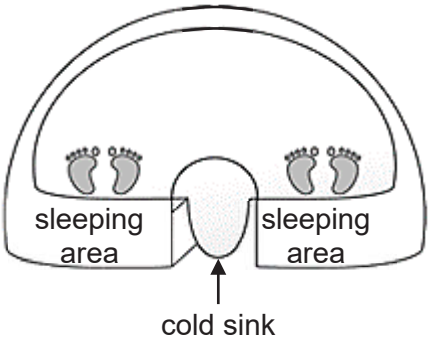

Fig. 4.2

(a) State one thermal property of the hard snow blocks that makes them suitable for building igloos.

.....

..... [1]

(b) Suggest one way by which the Eskimos can reduce their rate of heat loss by radiation when they sleep. Explain your answer.

.....

.....

.....

..... [2]

(c) Explain the process of how the heat from the Eskimos keep the igloo warm inside even if it is cold outside.

.....

.....

.....

.....

..... [2]

FREE TEST PAPERS - FREETESTPAPER.COM

5 Geothermal energy makes use of heat from the Earth's interior to generate power. Fig. 5.1 shows 1 200 kg of cold water at a temperature of 25 °C is pumped down to the hot rocks of the Earth's interior. 750 kg of it returns as hot water and the rest returns as steam, both at a temperature of 100 °C.

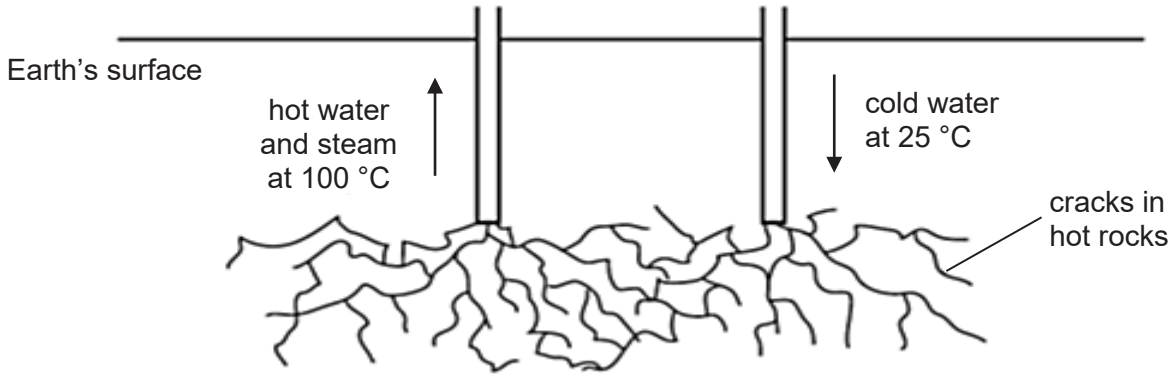

Fig. 5.1

The *specific heat capacity* of water is 4 200 J / (kg °C) and the *specific latent heat of vaporisation* of water is 2.3×10^6 J / kg.

(a) Distinguish between the *specific heat capacity* of water and the *specific latent heat of vaporisation* of water.

.....

.....

.....

.....[2]

(b) Calculate the energy needed to heat 1 200 kg of water from 25 °C to 100 °C.

energy =..... [2]

(c) Calculate the energy needed to produce steam at 100 °C.

energy =..... [2]

FREE TEST PAPERS - FREETESTPAPER.COM

6 **(a)** State what is meant by *critical angle*.

.....

.....

.....[1]

(b) Fig. 6.1 shows the cross-section of an optical fibre. The optical fibre has a very thin glass core with a diameter of 14 μm. The refractive index of the glass core is 1.65.

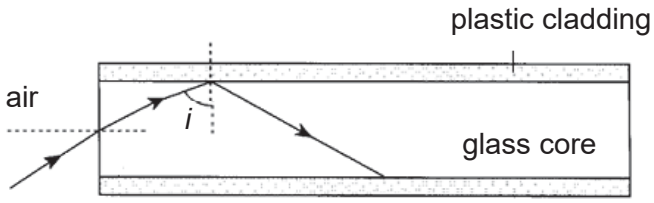

Fig. 6.1

(i) The glass core is surrounded by a plastic cladding.

State and explain which material has a higher refractive index and explain your answer.

.....

.....

.....

.....[2]

(ii) The light ray enters the air-glass interface at 45°.

Calculate the angle of refraction in the glass core.

angle of refraction = ...[2]

(iii) Prove that the minimum value for *i* is 37.3°.

[2]

FREE TEST PAPERS - FREETESTPAPER.COM

7 Fig. 7.1 shows a potential divider made from a thermistor and a 6.0 kΩ fixed resistor. The potential divider is connected in series with a 12 V d.c. power supply. A voltmeter is connected across the 6.0 kΩ resistor.

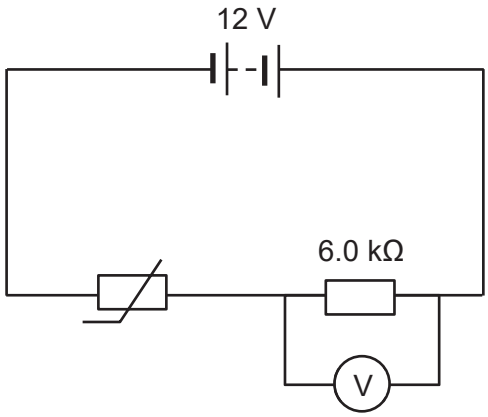

Fig. 7.1

(a) At the current room temperature of 30 °C, the resistance of the thermistor is 1.0 kΩ.

Calculate the reading on the voltmeter.

voltmeter reading = ...[2]

(b) The temperature of the room is gradually decreased.

State and explain what happens to the reading on the voltmeter.

.....

.....

.....

..... [2]

FREE TEST PAPERS - FREETESTPAPER.COM

8 Fig. 8.1 shows an electric heater used in a shower.

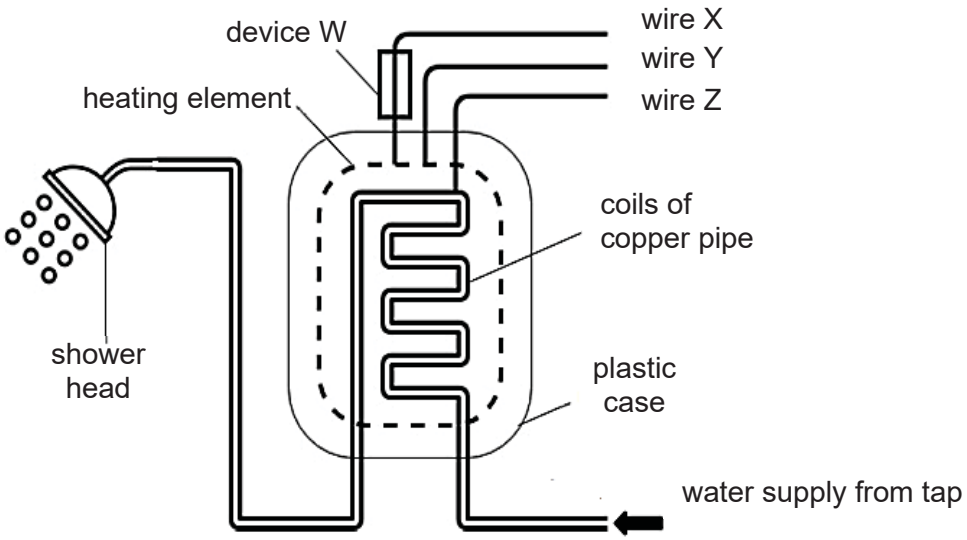

Fig. 8.1

(a) Wires X, Y and Z are connected to the mains power supply. Identify these wires and device W.

wire X: .....

wire Y: .....

wire Z: .....

device W: .....

[2]

(b) In a faulty water heater, an electric current flows from the heating element to the copper pipe and the water that flows inside. This puts the user at risk of electric shock when the shower is used.

(i) Explain how wire Z protects the user from electric shock.

.....

.....

.....

.....

.....

.....[2]

(ii) State the colour of the insulation for wire Z.

.....[1]

FREE TEST PAPERS - FREETESTPAPER.COM

(c) The water heater consumes 3.0 kW of power as it operates on 240 V a.c. Assume that the efficiency of the water heater is 100%.

The cost of electricity supplied is $0.30 per kWh.

Calculate the total cost of using the water heater for 30 minutes a day for 30 days.

total cost = ...[2]

FREE TEST PAPERS - FREETESTPAPER.COM

9 Fig. 9.1 shows a type of electric door lock.

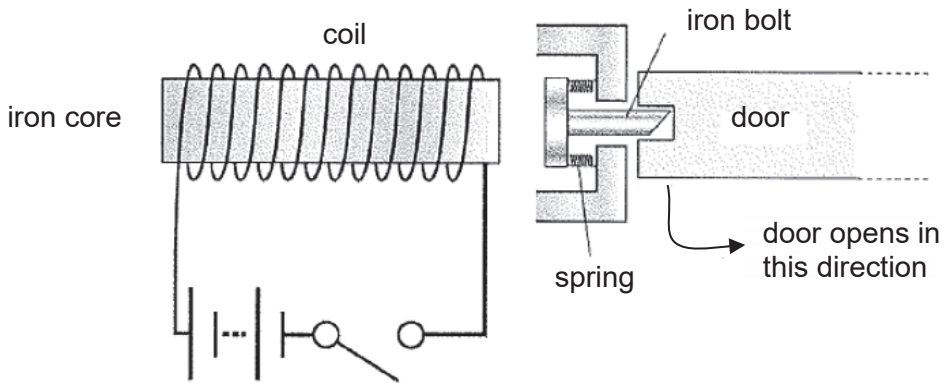

Fig. 9.1

The lock is closed when the position of the iron bolt is as shown in Fig. 9.1.

(a) Explain how closing the switch in the circuit allows the door to be opened.

.....

.....

.....

..... [2]

(b) The door's iron bolt is changed to a thicker piece of iron. When the switch is closed, the lock remains closed.

Without doing further changes to the bolt, suggest **two** other changes that could be made in order to open the lock.

.....

.....

.....

..... [2]

FREE TEST PAPERS - FREETESTPAPER.COM

Section B (30 marks)

Answer **all** the questions in this section.

Answer only one of the two alternative questions in **Question 12**.

10 An engineer designs a device that can be used to monitor the thickness of pipes as shown in Fig. 10.1.

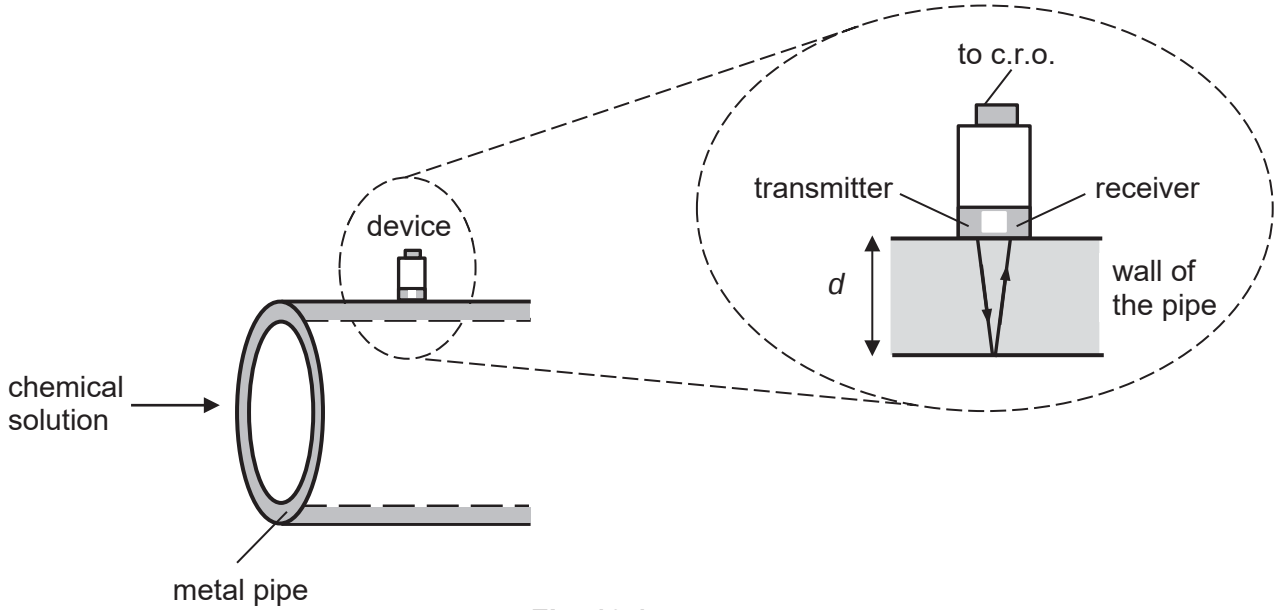

Fig. 10.1

The device emits an ultrasound pulse of frequency 4.0 x 10^6 Hz. The pulse travels through the wall of the metal pipe and is reflected by the inner wall back to the device. The returning pulse is picked up by the receiver. Both the transmitter and the receiver are connected to a cathode-ray oscilloscope (c.r.o.)

The metal pipe is made of steel. Table 10.1 shows the speed of sound in different media.

Table 10.1

medium	speed of sound / ms^{-1}
air	340
glass	4 000
steel	6 100
water	1 400

(a) (i) Determine the wavelength of the ultrasound pulse in the wall of the pipe.

wavelength = ...[2]

FREE TEST PAPERS - FREETESTPAPER.COM

(ii) At one point of time, the series of compressions and rarefactions of the ultrasound wave in the wall of the pipe is as shown in Fig. 10.2. Points A, B, C and D are at the centres of regions of compression.

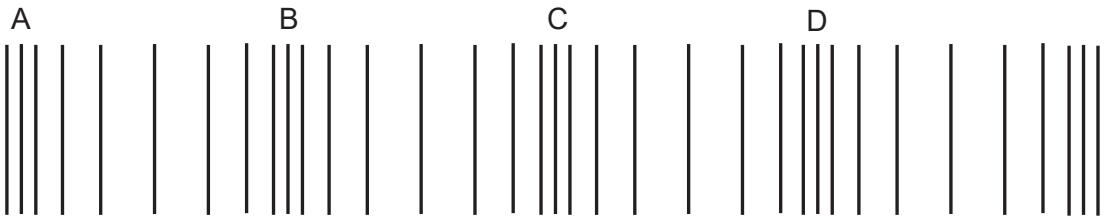

Fig. 10.2 (not to scale)

Determine the distance between points A and D.

distance = ...[1]

(b) The thickness of the pipe is 4.0 mm.

(i) Determine the time interval, in μs, between the emitted pulse and the reflected pulse.

time interval = ... μs [2]

(ii) The c.r.o. has a time base setting of 100 ns / div. Fig. 10.3 shows the emitted pulse on the c.r.o. On Fig. 10.3, draw the reflected pulse.

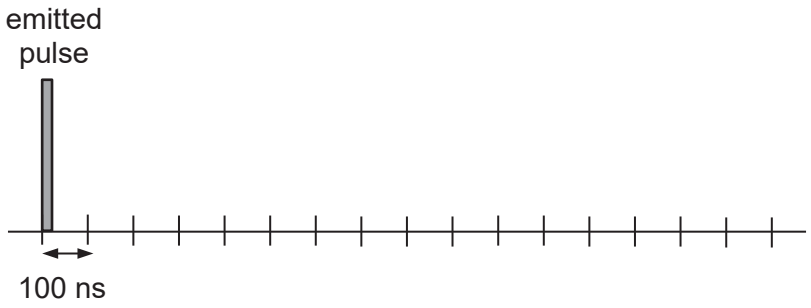

Fig. 10.3

[1]

FREE TEST PAPERS - FREETESTPAPER.COM

(c) Suggest and explain how your answer in **(b)(ii)** will change if the chemical solution corrodes the metal pipe.

.....

.....

.....

..... [2]

(d) The engineer's colleague suggests that the device should be placed at the bottom of the pipe in order to better monitor the thickness of the pipe. Explain how this can better monitor the thickness of the pipe.

.....

.....

.....

..... [2]

FREE TEST PAPERS - FREETESTPAPER.COM

11 **(a)** Fig. 11.1 shows a simple setup that can be used to detect seismic waves from earthquakes. The setup consists of a bar magnet suspended from a spring hanging from a metal rod. The metal rod transmits vibrations from the earth and the magnet moves in and out of the coil when there is an earthquake. The coil is connected to a cathode-ray oscilloscope (c.r.o.) that monitors the e.m.f across the coil.

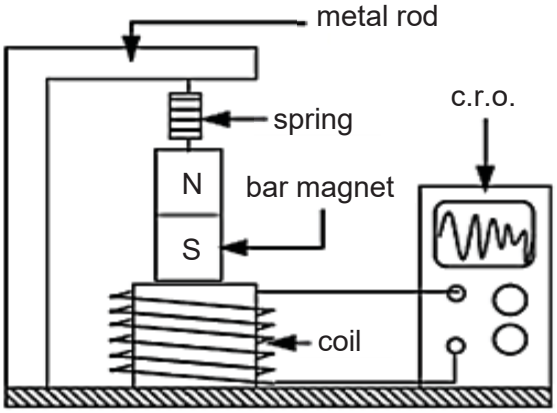

Fig. 11.1

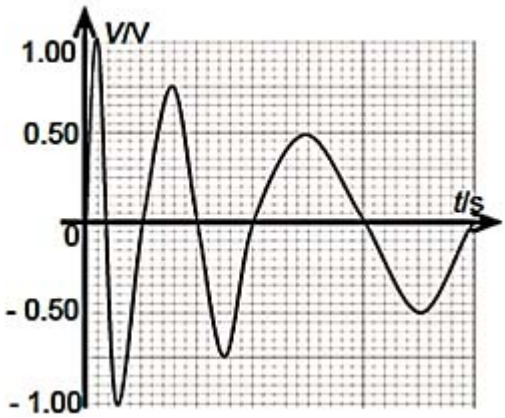

Fig. 11.2

Fig. 11.2 shows the trace that was displayed on the c.r.o. during a particular earthquake. Each complete oscillation of the same magnitude represents one tremor.

(i) Describe and explain how a trace shown on the c.r.o. in Fig. 11.2 is obtained when there is an earthquake.

.....

.....

.....

.....

.....

.....

.....

.....

.....[4]

(ii) On Fig. 11.1, indicate the direction of the current in the coil when the south pole of the magnet is moving into the coil. [1]

FREE TEST PAPERS - FREETESTPAPER.COM

(b) An output voltage of 2.0 V from a generator is connected to the primary coil of a step-up transformer with a turns ratio of 50 : 1. The current in the secondary coil is 2.4 mA. The transformer is 75% efficient.

(i) State the metal used for the core of a transformer.

.....[1]

(ii) Calculate the current in the primary coil.

current = ...[2]

(iii) State two reasons why a typical transformer is not 100% efficient.

.....

.....

.....

.....[2]

FREE TEST PAPERS - FREETESTPAPER.COM

12 EITHER

A car travelled along a smooth and straight road with a uniform speed of 20 ms^{-1} for 4.0 s. It then experienced *uniform deceleration* until it came to a stop 5.0 s later. It remained stationary for 2.0 s before it started to travel in the opposite direction. Its speed increased at a decreasing rate to reach 25 ms^{-1} after 8.0 s. After that it travelled at a uniform speed for another 6.0 s.

(a) (i) In the space below, sketch the velocity-time graph of the car.

[3]

(ii) State what is meant by *uniform deceleration*.

.....

.....[1]

(iii) Calculate the deceleration of the car.

deceleration = ...[2]

(b) Given that the mass of the car was 1 500 kg, determine the retarding force that was acting on the car from 4.0 s to 9.0 s.

retarding force = ...[2]

FREE TEST PAPERS - FREETESTPAPER.COM

(c) When the car was accelerating in the opposite direction, the driving force produced by the car engine was constant throughout its journey.

Explain, in terms of forces acting on the car, why the velocity was increasing at a decreasing rate, even though the driving force was constant.

.....

.....

.....

.....[2]

FREE TEST PAPERS - FREETESTPAPER.COM

12 OR

A golf club hits a stationary golf ball. Fig. 12.1 shows three stages in the process.

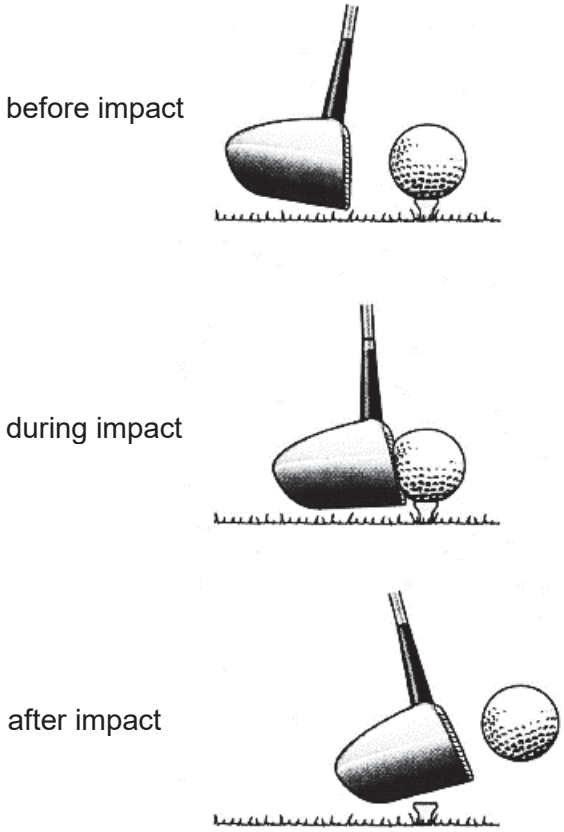

Fig. 12.1

(a) Explain how the principle of conservation of energy applies during the impact.

.....

.....

.....

.....

.....

.....[3]

(b) Using ideas about energy, explain why the speed of the golf ball does not depend on its mass.

.....

.....

.....

.....[2]

FREE TEST PAPERS - FREETESTPAPER.COM

(c) The golf ball rises from the ground at A to a vertical height of 16 m at B before landing on the ground at C, as shown in Fig. 12.2. You may assume that there is no air resistance as the ball travels from A to B to C.

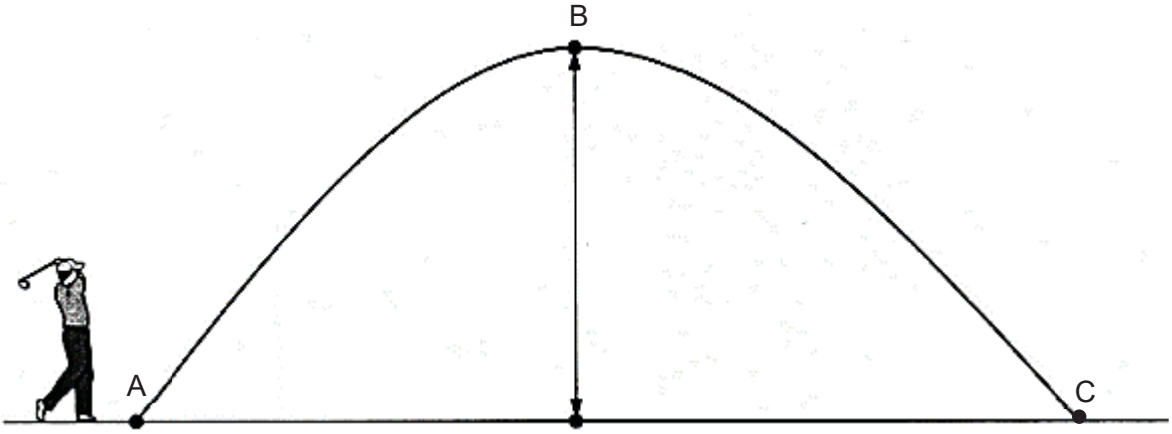

Fig. 12.2 (not to scale)

The mass of the ball is 0.045 kg. The gravitational field strength g is 10 N / kg.

(i) Calculate the increase in gravitational potential energy of the ball between A and B.

increase in potential energy = ...[2]

(ii) At B, the kinetic energy of the ball is 2.5 J.

Calculate the kinetic energy of the ball at A.

kinetic energy = ...[1]

(iii) Calculate the speed of the golf ball just before it lands at C.

speed = ...[2]

FREE TEST PAPERS - FREETESTPAPER.COM

BLANK PAGE

FREE TEST PAPERS - FREETESTPAPER.COM