Visit

FREETESTPAPER.com

for more papers

Website: freetestpaper.com

Facebook.com/freetestpaper

Twitter.com/freetestpaper

Name:	Class: Sec _____	Index No.: _____

3E

CORAL SECONDARY SCHOOL
END-OF-YEAR EXAMINATION 2016

PHYSICS

5059/01

Paper 1

14 Oct 2016

SECONDARY 3 EXPRESS

Duration: 45 mins

Additional Material: OTAS

READ THESE INSTRUCTIONS FIRST

Write in soft pencil.
Do not use staples, paper clips, glue or correction fluid.
Write your name, class and index number on all the work you hand in.

There are **thirty** questions on this paper. Answer **all** questions. For each question there are four possible answers **A, B, C** and **D**.
Choose the **one** you consider correct and record your choice in **soft pencil** on the separate OTAS sheet.

Each correct answer will score one mark. A mark will not be deducted for a wrong answer.
Any rough working should be done in this booklet.
The use of an approved scientific calculator is expected, where appropriate.

This question paper consists of **10** printed pages, including this page.

[Turn over

FREE TEST PAPERS - FREETESTPAPER.COM

1 A pair of vernier calipers is used to measure the thickness of a piece of wood as shown in the figure below. When the jaws are closed, the reading of the vernier calipers is 0.1 mm.

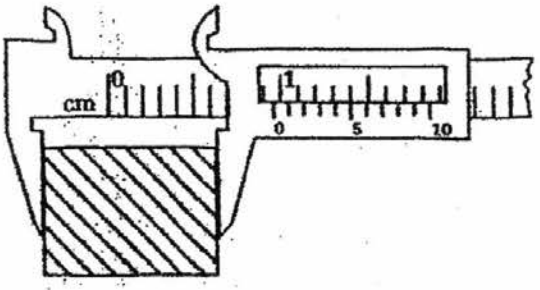

What is the thickness of the wood?

A 0.84 cm B 0.94 cm C 0.95 cm D 0.96 cm

2 A piece of wire is wound tightly round a pen as shown in the diagram below. The turns are next to one another but not overlapping. When there are 500 turns of the wire, the length of the pen covered by the wire is found to be 3.8 cm.

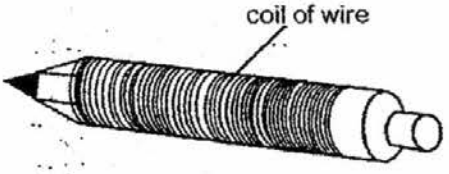

What is the average diameter of the wire?

A 0.0076 mm B 0.0038 mm C 0.076 mm D 0.038 mm

3 A truck travelling at 20 m/s undergoes uniform deceleration of 3 m/s^2 for 4 s.

What is the final velocity of the truck?

A 0 m/s B 8 m/s C 20 m/s D 32 m/s

4 The displacement-time graph of an object for its 20 s journey is shown below.

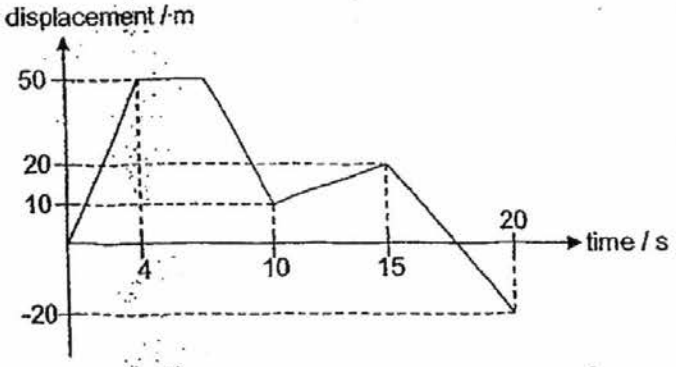

What is the total distance travelled by the object in the 20 s journey?

A 20 m B 70 m C 100 m D 140 m

FREE TEST PAPERS - FREETESTPAPER.COM

5 The diagram below represents the speed-time graph of a rock that is thrown vertically upwards with an initial speed of 40 m/s.

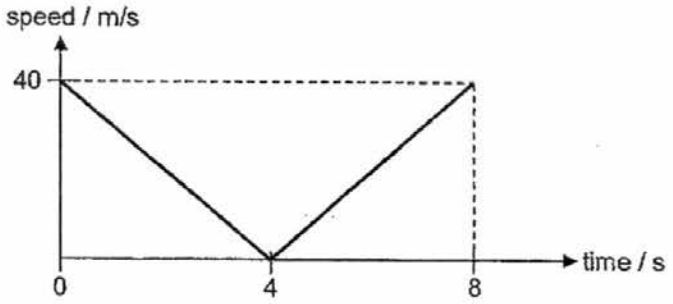

What is the maximum height reached by the rock?

A 40 m **B** 80 m **C** 160 m **D** 320 m

6 A boy pushes a wooden block across a table at a constant velocity.

Which statement is correct?

A The reaction force is the force that the block pushes back on the boy.

B The reaction force is the friction that opposes the motion of the block.

C The frictional force is greater than the pushing force.

D The frictional force is smaller than the pushing force.

7 The mass of a model rocket is 120 kg. The rocket engine is able to provide an upward thrust of 1500 N.

What is the acceleration of the rocket?

A 2.0 m/s^2 **B** 2.5 m/s^2 **C** 10.0 m/s^2 **D** 12.5 m/s^2

8 The diagram below shows two blocks being pulled by a 20 N force. The two blocks of mass 3 kg and 5 kg are held together by a light, inextensible string. The friction on the 3 kg and 5 kg blocks are 2 N and 4 N respectively.

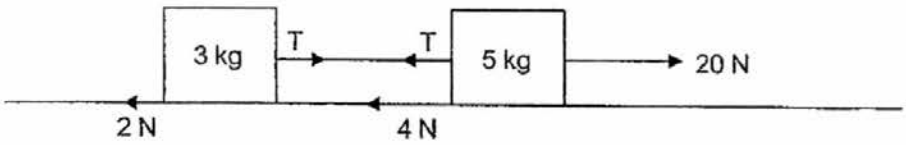

What is the magnitude of the tension T?

A 5.25 N **B** 7.25 N **C** 14.00 N **D** 20.00 N

FREE TEST PAPERS - FREETESTPAPER.COM

9 In 1969, humans created history when Neil Armstrong became the first human to walk on the Moon.

Which option about his mass and the gravitational pull he experienced on the moon is correct?

	mass	gravitational pull
A	same as on earth	less than on earth
B	less than on earth	less than on earth
C	same as on earth	zero
D	less than on earth	zero

10 A uniform flat rectangular piece of metal sheet has a density of 7.00 g/cm^3. One quarter of the metal sheet is cut out as shown in the diagram below.

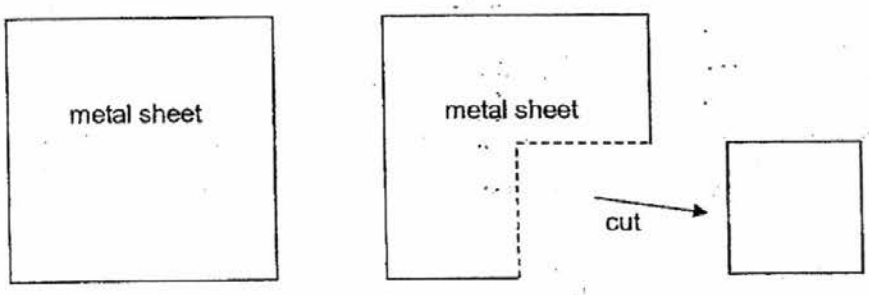

What is the density of the one quarter metal sheet?

A 1.75 g/cm^3 B 3.50 g/cm^3 C 7.00 g/cm^3 D 28.00 g/cm^3

11 When solid P of mass 12 g is immersed in a measuring cylinder filled with water, it displaces the same volume of water as solid Q of mass 8 g.

What can be deduced about the densities of solids P and Q?

A P and Q have the same density.

B Density of P is 4 times the density of Q.

C Density of P is 2 times the density of Q.

D Density of P is 1.5 times the density of Q.

FREE TEST PAPERS - FREETESTPAPER.COM

12 A uniform metre rule of weight 1.04 N balances at the 60 cm mark when a weight W is placed at the 90 cm mark.

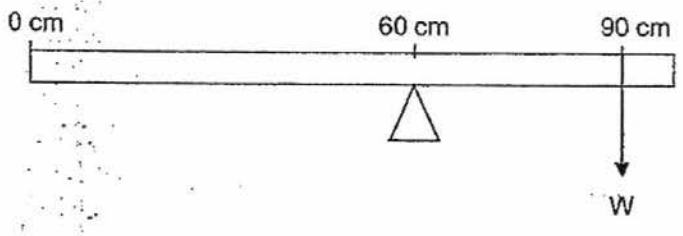

What is the value of W?

A 0.347 N **B** 0.578 N **C** 0.693 N **D** 1.04 N

13 Which of the following boxes topples most easily when disturbed?

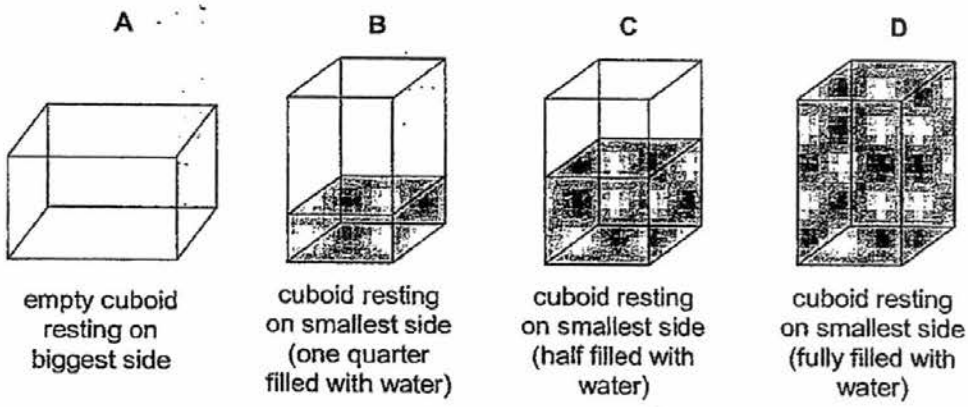

14 Which of the following boxes will topple at the position shown?

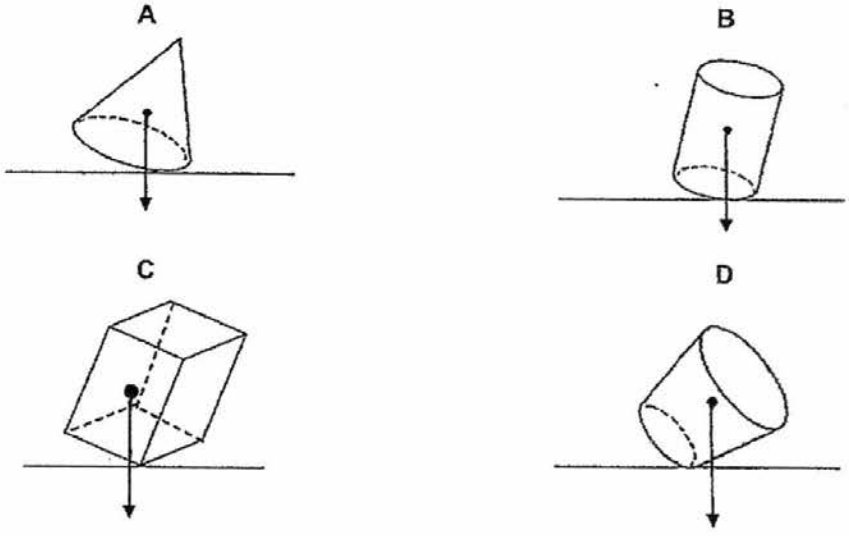

FREE TEST PAPERS - FREETESTPAPER.COM

15 A mass suspended from a spring is at rest at point Q. The mass is pulled down to point R and released. The mass moves vertically upwards and reaches a maximum height at P.

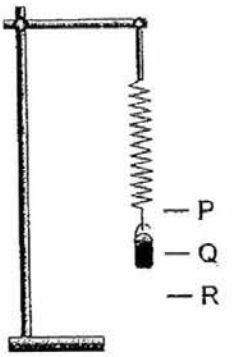

Which statement represents the total energy conversion that takes place from R to P?

A elastic potential energy → kinetic energy

B elastic potential energy → kinetic energy + elastic potential energy

C elastic potential energy → gravitational potential energy + elastic potential energy

D elastic potential energy → gravitational potential energy + kinetic energy

16 A force of 11 N pulls a 2 kg block up a rough slope at a constant velocity.

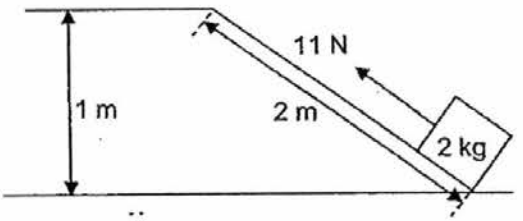

What is the work done against friction?

A 1 J **B** 2 J **C** 20 J **D** 22 J

17 A force F is applied on piston P such that the piston moves down 2 cm. This causes piston Q to move up.

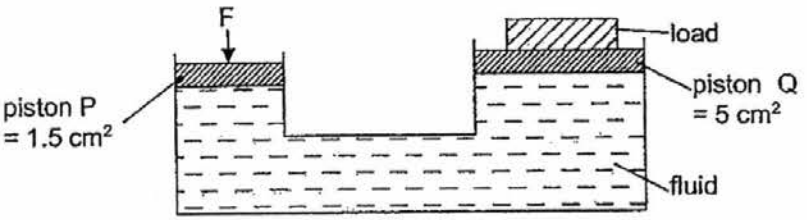

What is the distance moved by piston Q?

A 0.6 cm **B** 1.0 cm **C** 2.0 cm **D** 6.7 cm

FREE TEST PAPERS - FREETESTPAPER.COM

18 A U-tube containing mercury is connected to two gas tanks as shown. The pressure of the gas in tank P is 80 cm Hg.

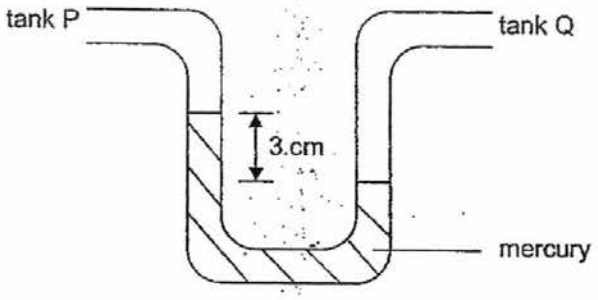

What is the pressure of the gas in tank Q?

A 77 cm Hg **B** 80 cm Hg **C** 83 cm Hg **D** 86 cm Hg

19 The mercury level in a mercury-in-glass thermometer rises as the temperature rises.

Which of the following remains constant?

A density of mercury

B internal energy of mercury

C mass of mercury

D volume of mercury

20 A mercury-in-glass thermometer and a platinum resistance thermometer are calibrated linearly from measurements at the ice and steam points. The two thermometers should necessarily agree

A at every temperature within the operating temperature range of the thermometer.

B only at the calibration points.

C at the temperature of zero Kelvin.

D at the temperature mid-way between the calibration points.

FREE TEST PAPERS - FREETESTPAPER.COM

21 When fine pollen grains suspended in water are viewed under a microscope, they are seen to be making small, erratic movements.

Why is this so?

A There are convection currents in the water.

B They are being hit by randomly moving water molecules.

C They are moving and colliding with one another.

D They are living organisms so they move around.

22 The diagram shows gas molecules being heated in an air-tight cylinder that is enclosed by a fixed piston, such that the volume remains constant.

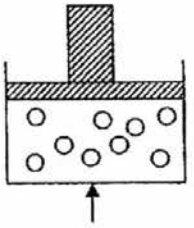

Which of the following statement(s) explain(s) why the pressure increases?

1 The speed of molecules increases.

2 The force of each collision between the molecule and the wall increases.

3 The rate of collision increases.

A 1 only **B** 2 only **C** 2 and 3 only **D** 1, 2 and 3

23 A balloon of volume 2 cm^3 is placed in an air-tight container and the pressure inside and outside the balloon are initially the same at 760 mm Hg. A pump removes some air such that the pressure outside the balloon is now 500 mm Hg, causing the balloon to expand.

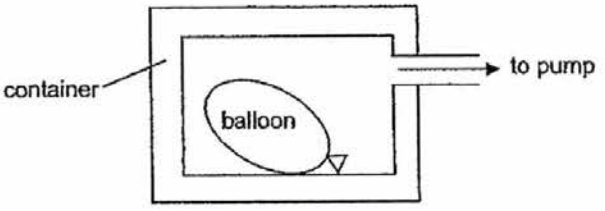

What is the final volume of the balloon?

A 3.00 cm^3 **B** 3.04 cm^3 **C** 4.00 cm^3 **D** 4.04 cm^3

FREE TEST PAPERS - FREETESTPAPER.COM

24 Which of the following statements about a vacuum flask are true?

1 The plastic stopper reduces heat loss by convection and evaporation.

2 The vacuum in the flask reduces heat loss by radiation.

3 The silver surface reduces heat loss by conduction.

4 The vacuum reduces heat loss by conduction and convection.

A 1 and 2 only **B** 1 and 4 only **C** 2 and 3 only **D** 1, 2 and 3 only

25 A match which is placed 3 cm directly above a flame is ignited. However, a similar match placed 3 cm beside the same flame is not ignited.

This is because most of the heat energy is transferred by

A radiation.

B conduction.

C convection.

D evaporation.

26 2 kg of sample P and 1 kg of sample Q are heated over the same heater for 8 minutes. The graph shows the temperature changes for samples P and Q.

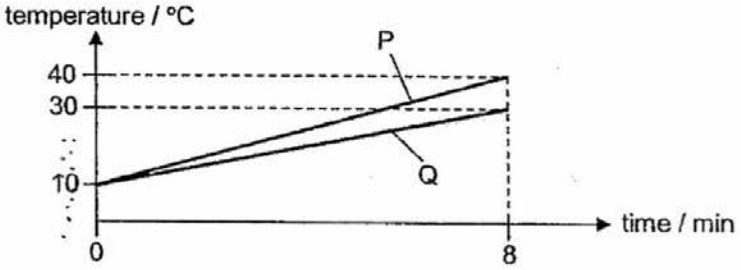

Which statement is correct?

A Specific heat capacity of P is equal to specific heat capacity of Q.

B Specific heat capacity of P is 3 times the specific heat capacity of Q.

C Specific heat capacity of Q is 3 times the specific heat capacity of P.

D Heat capacity of Q is equal to heat capacity of P.

FREE TEST PAPERS - FREETESTPAPER.COM

27 A heater of power 200 W is immersed in a filter funnel of crushed melting ice. Before the heater is switched on, 10 g of water is collected from the melting ice in 1 minute. When the heater is switched on, the mass of water collected from the melting ice in 1 minute is 50 g.

What is the specific latent heat of fusion of ice?

A 4 J/g **B** 5 J/g **C** 240 J/g **D** 300 J/g

28 Which of the following is a difference between boiling and evaporation?

A Intermolecular force weakens during boiling but not during evaporation.

B Boiling does not increase kinetic energy of molecules but evaporation does.

C Boiling involves all the molecules in the liquid but evaporation does not.

D Boiling increases the internal energy while evaporation does not.

29 Which of the following are properties of electromagnetic waves?

1 All electromagnetic waves can travel through vacuum.

2 All electromagnetic waves are invisible.

3 All electromagnetic waves carry no charges.

4 All electromagnetic waves can be reflected.

A 1 and 3 only **B** 1 and 4 only **C** 2 and 3 only **D** 1, 3 and 4 only

30 Below are four statements about the uses of electromagnetic waves.

1 Gamma rays are used in medical treatment.

2 Infra-red waves are used in sunbeds.

3 Microwaves are used in satellite TV.

4 X-rays are used in intruder alarms.

How many of these statements is/are correct?

A 1 **B** 2 **C** 3 **D** 4

~ END OF PAPER ~

FREE TEST PAPERS - FREETESTPAPER.COM

Name:	Class: Sec _____	Index No.: _____

3E

CORAL SECONDARY SCHOOL
END-OF-YEAR EXAMINATION 2016

PHYSICS

5059/02

Paper 2

4 Oct 2016

SECONDARY 3 EXPRESS

Duration: 1 hour 30 minutes

No Additional Materials are required.

READ THESE INSTRUCTIONS FIRST

Write your name, class and index number on all the work you hand in.
Write in dark blue or black pen.
You may use a HB pencil for any diagrams or graphs.
Do not use staples, paper clips, glue or correction fluid.

Section A

Answer **all** questions in the spaces provided.

Section B

Answer **all** questions.

Candidates are reminded that **all** quantitative answers should include appropriate units.
The use of an approved scientific calculator is expected, where appropriate.
Candidates are advised to show all their working in a clear and orderly manner, as more marks are awarded for sound use of Physics than for correct answers.

At the end of the examination, fasten all your work securely together.
The number of marks is given in brackets [ ] at the end of each question or part question.
Unless otherwise stated, use $g = 10\ m/s^2$ for all your calculations.

For Examiner's Use		
Section	**Question(s)**	**Marks**
A	1 – 8	
B	9	
	10	
	Total Marks	

This question paper consists of **15** printed pages, including this page.

[Turn over

6

FREE TEST PAPERS - FREETESTPAPER.COM

SECTION A

Answer **all** questions in this section. [50 marks]

1 Fig. 1.1 shows the velocity-time graph of an object as it travels from point A to point B in 22 seconds.

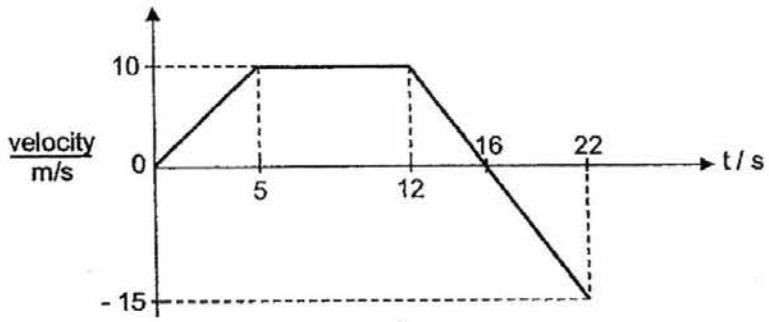

Fig. 1.1

(a) Calculate the acceleration of the object during the period of

(i) t = 0 s to t = 5 s,

acceleration = ... [1]

(ii) t = 12 s to t = 22 s.

acceleration = ... [2]

(b) Describe the motion of the object throughout the whole journey.

.....

.....

.....

..... [2]

FREE TEST PAPERS - FREETESTPAPER.COM

(c) Determine the displacement of point B from A.

displacement = ... [2]

(d) State the time during the journey when the object is furthest away from A.

time = ... [1]

2 Fig. 2.1 shows the air resistance experienced by a rock as it is released from rest from a certain height above the ground. After 10 s, the rock reaches terminal velocity.

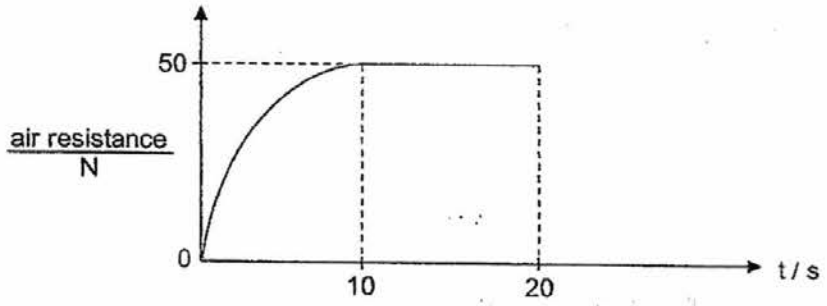

Fig. 2.1

(a) State the initial acceleration of the rock.

acceleration = ... [1]

(b) Explain why the air resistance increases in the first 10 s.

.....

..... [1]

(c) Use Newton's Laws of motion to explain why the rock accelerates first then reaches terminal velocity.

.....

.....

.....

..... [2]

FREE TEST PAPERS - FREETESTPAPER.COM

(d) Hence, state the weight of the rock.

weight = ... [1]

(e) The weight of the rock is one of the two forces that forms an action-reaction pair of forces.

Describe the other force of the action-reaction pair.

.....

..... [1]

3 An object of weight *W* is suspended by two ropes from a beam, as shown in Fig 3.1.

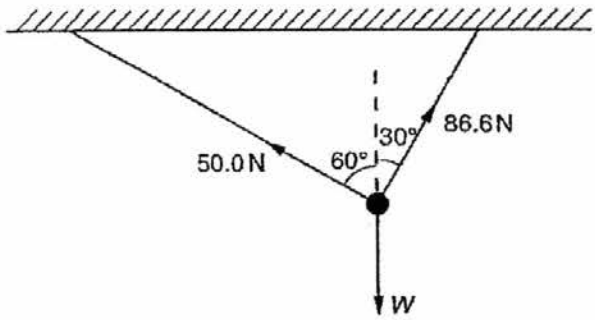

Fig. 3.1

(a) In the space below, draw a scale diagram to find the resultant force due to the tension in the ropes.

State the scale used.

resultant force = ... [3]

FREE TEST PAPERS - FREETESTPAPER.COM

(b) Hence, state the weight W of the object.

W = ... [1]

4 Fig. 4.1 shows a submarine resting near the bottom of the sea. To float up to the surface, the seawater that fills the two ballast tanks are removed and replaced with air. Fig. 4.2 shows the total mass, volume of the submarine and the density of seawater.

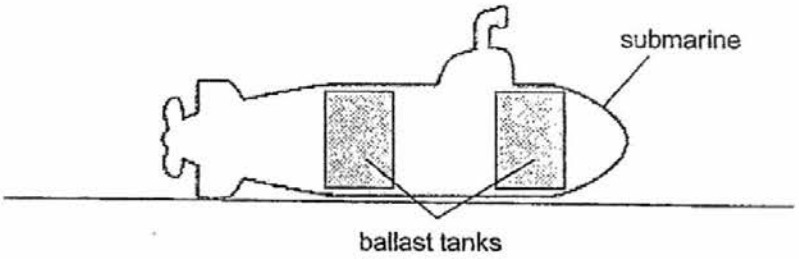

Fig. 4.1

total mass of submarine (with ballast tank filled with seawater)	120 000 kg
total volume of submarine	100 m^3
density of seawater	1 020 kg/m^3

Fig. 4.2

(a) Calculate the density of the submarine when the ballast tank is still filled with seawater.

density = ... [1]

(b) Explain why by replacing seawater in the ballast tanks with air, the submarine can float up to the surface.

.....

.....

.....

..... [2]

FREE TEST PAPERS - FREETESTPAPER.COM

(c) Hence, determine the minimum volume of seawater that has to be removed from the ballast tanks for the submarine to float up.

minimum volume = ... [3]

5 Figure 5.1 shows a simplified diagram of a paper hole-puncher. A force of 5 N is applied on the arm of the hole-puncher which causes the knife to come down and punch a hole in a piece of paper inserted under the hole-puncher.

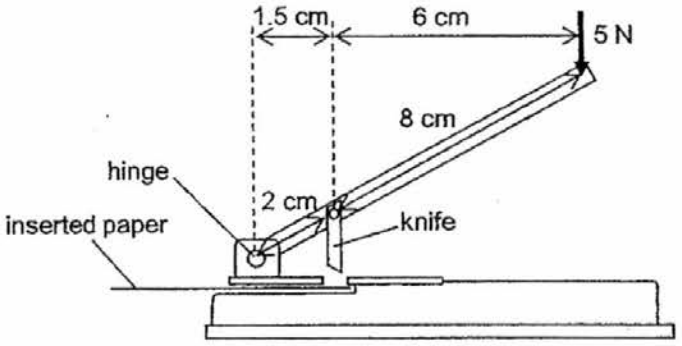

Fig. 5.1

(a) State what is meant by moment of a force.

.....

..... [1]

(b) Determine the force exerted by the knife on the paper.

force = ... [2]

FREE TEST PAPERS - FREETESTPAPER.COM

(c) The same force of 5 N is exerted in a new direction as shown in Fig. 5.2.

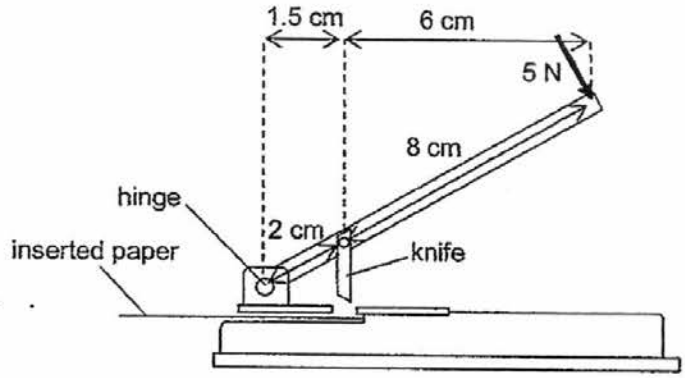

Fig. 5.2

(i) Explain whether the hole-puncher will exert a greater or smaller force on the paper through the knife.

.....

.....

..... [1]

(ii) Suggest **two** changes to the design of the hole-puncher such that the same 5 N force can also create a greater force on the paper.

.....

.....

.....

..... [2]

FREE TEST PAPERS - FREETESTPAPER.COM

6 Fig. 6.1 shows an electric toy car of mass 500 g that is powered by batteries. From point A, the car accelerates uniformly from rest and reaches point B 5 s later with a velocity of 2 m/s. From point B, the battery power is cut and the car slows down under a constant frictional force to rest at C, 3 m from B.

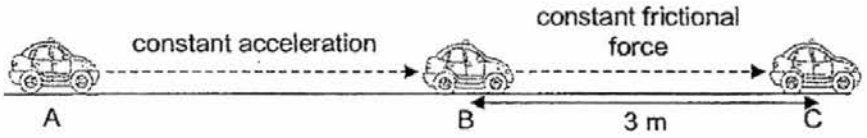

Fig. 6.1

(a) It is assumed that there are no resistive forces acting on the car or energy loss between A to B.

(i) State the energy conversion that occurs as the battery powers the toy car from point A to B.

.....

..... [1]

(ii) Hence, calculate the average power delivered by the battery from point A to B.

average power = ... [2]

(iii) The same experiment in Fig. 6.1 is repeated 20 times before the battery is exhausted of its stored energy.

Determine the amount of energy stored in the battery in the beginning.

energy stored = ... [1]

(b) Determine the constant frictional force required to bring the toy car to a stop from B to C.

frictional force = ... [2]

FREE TEST PAPERS - FREETESTPAPER.COM

7 Due to the recent heat wave, Ah Sheng bought a portable air-conditioner to cool his room. Fig. 7.1 shows some key features of his room and the location of his portable air-conditioner.

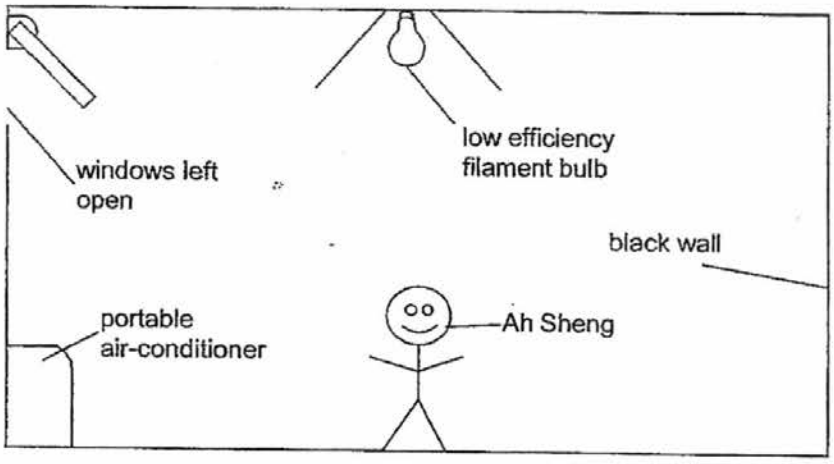

Fig. 7.1

When the portable air-conditioner is used, Ah Sheng is not able to effectively cool his room.

(a) Explain briefly how each of the following features listed affect the effectiveness of cooling the room.

(i) portable air-conditioner,

.....

.....

..... [2]

(ii) black wall,

.....

..... [1]

(iii) low efficiency light bulb,

.....

..... [1]

(iv) windows left open.

.....

..... [1]

FREE TEST PAPERS - FREETESTPAPER.COM

(b) Ah Sheng believes that the main reason why his room is not effectively cooled is because there are not enough furniture in the room. He suggests adding more furniture as this will reduce the remaining volume of the room to be cooled.

State, with a reason, if adding more furniture will improve the efficiency.

.....

.....

.....

..... [2]

8 Fig. 8.1 shows the relationship between the power delivered and the wavelength of the sun's radiation. The shaded portion represents the region of visible light. The range of wavelength for visible light is between 400 nm to 700 nm.

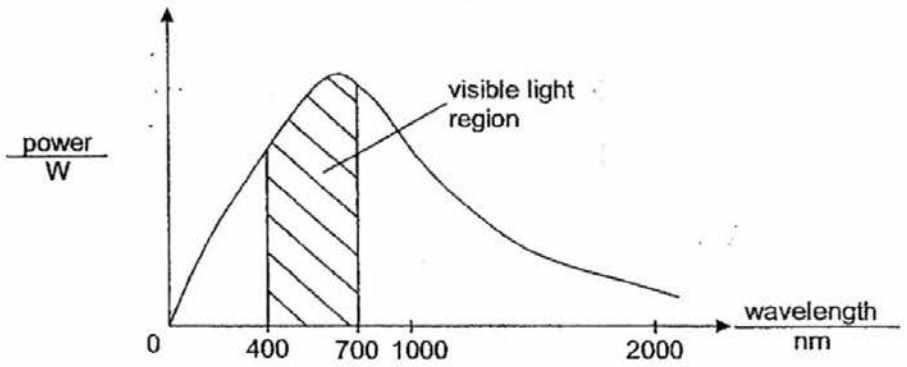

Fig. 8.1

(a) Explain, using the graph in Fig. 8.1, why the sun's radiation is not efficient in delivering visible light energy to the Earth.

.....

.....

..... [1]

(b) The sun is able to warm the Earth due to a particular type of electromagnetic radiation.

(i) State the name of this radiation.

..... [1]

(ii) Using Fig. 8.1, estimate the wavelength of this radiation.

..... [1]

FREE TEST PAPERS - FREETESTPAPER.COM

(iii) State another use of this radiation.

..... [1]

(c) A thermocouple is used to measure the temperature on Earth due to the sun's radiation. When the thermocouple's cold and hot junctions are placed in ice point and steam point of pure water, the e.m.f. produced is 12 mV. The hot junction is now placed under the sun's radiation at noon time and the e.m.f. produced is 5.2 mV.

(i) Determine the temperature of the hot junction due to the sun's radiation.

temperature = ... [2]

(ii) It is known that the temperature of Earth's surface depends on the time of the day. The temperature at noon is said to be warmer than that in early evening, just before sunset.

Suggest a reason for this.

.....

..... [1]

FREE TEST PAPERS - FREETESTPAPER.COM

SECTION B

Answer **all** the questions in this section. [20 marks]

9 Fig. 9.1 and Fig. 9.2 show an experiment to measure the specific heat capacity of a piece of metal.

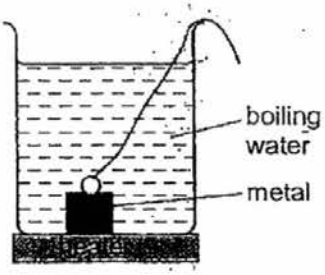

Fig. 9.1

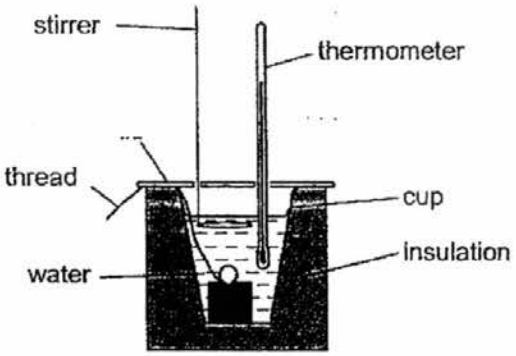

Fig. 9.2

The piece of metal is heated in boiling water until it has reached the temperature of the water. It is then transferred rapidly to some water in a well-insulated cup. A very sensitive thermometer is used to measure the initial and final temperatures of the water in the cup. The specific heat capacity of water is 4200 J / kg°C.

The readings from the experiment are as follows:

mass of metal = 50 g
mass of water in cup = 200 g
initial temperature of water in cup = 21.1 °C
final temperature of water in cup = 22.9 °C

(a) State what is meant by the specific heat capacity of water is 4200 J / kg°C?

.....

..... [1]

(b) Explain the purpose of having a layer of insulation around the cup in Fig. 9.2.

.....

..... [1]

(c) The metal and the water in the cup reached thermal equilibrium at the final temperature of the water.

(i) State what is meant by thermal equilibrium.

.....

..... [1]

FREE TEST PAPERS - FREETESTPAPER.COM

(ii) Calculate the temperature rise of the water in the cup and the temperature fall of the piece of metal.

temperature rise of water = ...

temperature fall of metal = ... [2]

(iii) Calculate the thermal energy gained by the water in the cup.

thermal energy gained = ... [2]

(iv) Calculate the specific heat capacity of the metal.

specific heat capacity = ... [2]

(d) The cup has to be made of a material that has very low specific heat capacity so that the accuracy in the calculation of the specific heat capacity is not greatly affected.

Explain why.

.....

..... [1]

FREE TEST PAPERS - FREETESTPAPER.COM

10 Fig. 10.1 shows a barometer which is used to measure the atmospheric pressure. Fig. 10.2 shows the same barometer with a layer of liquid X added to the surface of the mercury in the trough.

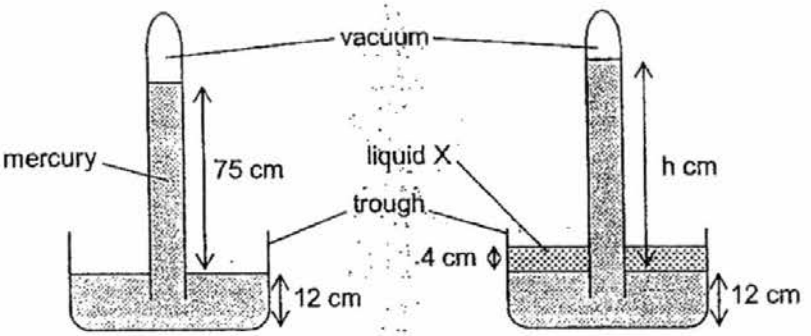

Fig. 10.1 **Fig. 10.2**

The density of mercury is 13600 kg/m^3 and that of liquid X is 5200 kg/m^3. The base area of the trough is 16 cm^2.

(a) State the value of the atmospheric pressure in cmHg.

atmospheric pressure = ... [1]

(b) Calculate the pressure in Pa at the bottom of the trough in Fig. 10.1.

pressure = ... [2]

(c) Hence, calculate the force exerted at the bottom of the trough in Fig. 10.1.

force exerted = ... [1]

(d) When liquid X is added in Fig. 10.2, the mercury level in the barometer rises.

(i) Explain why the mercury level rises.

.....

..... [1]

FREE TEST PAPERS - FREETESTPAPER.COM

(ii) Hence, calculate the new height h.

h = ... [2]

(e) The barometer in Fig. 10.1 undergoes one of the following modifications.

State the effect on the mercury level in Fig. 10.1 for each modification.

(i) using a barometer tube of larger cross-sectional area,

..... [1]

(ii) replacing the mercury with a liquid of lower density,

..... [1]

(iii) adding more mercury into the trough such that the height of mercury in the trough becomes 14 cm.

..... [1]

~ END OF PAPER ~

FREE TEST PAPERS - FREETESTPAPER.COM

FREE TEST PAPERS - FREETESTPAPER.COM

CSS EOY Examination 2016
Secondary 3 Express
Physics (5059)

Marking Scheme:

Paper 1

1	B	11	D	21	B
2	C	12	A	22	D
3	B	13	D	23	B
4	D	14	D	24	B
5	B	15	C	25	C
6	A	16	B	26	C
7	B	17	A	27	D
8	B	18	C	28	C
9	A	19	C	29	D
10	C	20	A	30	B

Paper 2

Section A

1	(a) i	acceleration = (10 – 0)/5 = 2 m/s^2	 A1
	ii	acceleration = (0 – 10) / (16 – 12) = -10 / 4 = - 2.5 m/s^2	C1 A1
	(b)	t = 0 to 5s, the object undergoes constant acceleration. t = 5 to 12s, the object travels at constant velocity. t = 12 – 22s, the object experiences negative acceleration. B1 (at least 1 correct only) B2 (all correct).	 B2
	(c)	Displacement = ½ (16 + 7)(10) – ½ (6)(15) = 70 m	C1 A1
	(d)	16 s	A1
2	(a)	10 m/s^2	A1
	(b)	The speed is increasing.	B1

FREE TEST PAPERS - FREETESTPAPER.COM

	(c)	When the rock is released, the resultant force on the rock decreases as the air-resistance increases and act against the weight of the rock. Based on Newton's 2nd law the acceleration decreases. When it reaches terminal velocity, the air-resistance equals the weight and the object travels at constant velocity based on Newton's 1st law as there is no resultant force.	B1 B1
	(d)	50 N	A1
	(e)	The gravitational force the rock exerts on the Earth.	B1
3	(a)	Appropriate scale Correct scale drawing Resultant force = 98 – 102 N	B1 B1 B1
	(b)	value equal to resultant force in (a)	B1
4	(a)	density = 120000 / 100 = 1200 kg/m^3	 A1
	(b)	As the seawater is removed from the tanks, the mass of the submarine reduces. This will cause the average/effective density to reduce below the seawater's density, causing it to float.	B1 B1
	(c)	new density of submarine to float = 1020 kg/m^3 m/v = 1020 new mass m = 1020 x 100 = 102 000 kg amount of seawater removed = 120 000 – 102 000 = 18 000 kg volume of seawater removed = 18000 / 1020 = 17.6 m^3	 A1 A1 A1
5	(a)	Product of the force and the perpendicular distance of the line of action of the force to the pivot.	B1
	(b)	F x 1.5 = 5 x 7.5 F = 25 N (no marks if 2 cm and 10 cm are used instead)	C1 A1
	(c) i	The force on the knife will be greater. Because the perpendicular distance of the 5 N force applied is longer.	 B1

FREE TEST PAPERS - FREETESTPAPER.COM

	ii	reduce the perpendicular distance of knife from pivot increase the length of the arm and exert the 5 N force at the end.	B1 B1
6	(a)i	Chemical potential energy -> kinetic energy	B1
	ii	Power delivered = change in KE / time $= (1/2 \times 0.5 \times 2^2) / 5$ $= 0.2$ W	 C1 A1
	iii	Energy per experiment = 0.2 x 5 = 1 J Total energy = 1 x 20 = 20 J	 B1
	(b)	F x d = KE $F \times 3 = ½ \times 0.5 \times 2^2$ F = 0.333 N	 C1 A1
7	(a) i	The cold air produced by the portable air conditioner is denser and sinks. The air-conditioner is positioned too low so it does not produce convection currents are formed.	B1 B1
	ii	Black colour is a good emitter of radiation and radiates more heat into the room as the wall is warmer.	B1
	iii	The low efficiency filament bulb gives out a lot of heat energy by radiation, warming up the room.	B1
	iv	The open windows allow warm air to enter the room, making the room warm.	B1
	(b)	It will not improve the effectiveness. Because the furniture will increase the heat capacity as it has more matter.	B1 B1
8	(a)	Most of the radiation delivered by the sun is outside the visible light region on the graph. So efficiency is low.	B1
	(b) i	Infrared	B1
	ii	700nm – 1000 nm accepted (e.c.f. allow from i)	B1
	iii	Burglar alarm / remote control device or any relevant answer (e.c.f. allow from i)	B1
	(c)i	$12 = k(100 - 0)$ $k = 0.12$ $5.2 = k(\theta - 0)$ $5.2 = 0.12(\theta - 0)$	 C1

15

FREE TEST PAPERS - FREETESTPAPER.COM

		$\theta = 43.3$ °C	A1
	ii	The sunlight shines perpendicular to the surface at noon time but side way to the surface in the evening so more radiation will strike the surface during noon time to make the surface warmer.	B1

Section B

9	(a)	It meant that when 1 kg of water absorbs 4200 J of thermal energy, it will rise in temperature by 1 °C/K.	B1
	(b)	It reduce heat loss to the surrounding so as to improve the accuracy of the experiment.	B1
	(c) i	It meant that there is no net heat transfer between the metal and the water.	B1
	ii	Temperature rise of water = 22.9 – 21.1 = 1.8 °C Temperature fall of metal = 100 – 22.9 = 77.1 °C	B1 B1
	iii	Energy gain = $mc\Delta\theta$ = 0.2 x 4200 x 1.8 = 1512 J	 C1 A1
	iv	$mc\Delta\theta = 1512$ 0.05 x c x 77.1 = 1512 c = 392 J / kgK	 C1 A1
	(d)	With low specific heat capacity, the heat energy absorbed by the cup during the experiment will be insignificant so that very little heat is lost to heat up the cup.	B1
10	(a)	75 cmHg	B1
	(b)	Pressure = hpg = (0.75 + 0.12) x 13600 x 10 = 118320 Pa	 C1 A1
	(c)	F = P x A = 118320 x 16 / 10000 (e.c.f. allowed) = 189 N	 A1
	(d)i	The liquid increase the pressure exerted on the surface of mercury in the trough, this pushes the mercury level in the tube up.	B1
	ii	hpg = 0.75 x 13600 x 10 + 0.04 x 5200 x 10 h x 13600 x 10 = 104080 h = 76.5 cm	C1 A1

FREE TEST PAPERS - FREETESTPAPER.COM

	(e)i	No change in level	B1
	ii	Liquid level increases	B1
	iii	height of mercury level increase by 2 cm, or height difference with surfaces remains unchanged.	B1

16

FREE TEST PAPERS - FREETESTPAPER.COM

FREE TEST PAPERS - FREETESTPAPER.COM